MAUI

A 2013 National Space Settlement Contest Proposal

Authored by

Robert Gitten
Jackie Linevsky
Zared Schwartz
Jonathan Schiller
Reagan Fuhr
Gabriel Teixiera

Cypress Bay High School Weston, FL

TABLE OF CONTENTS

Introduction…7
Executive Summary…7
Why Saturn?...8
Why Maui?...10
Acknowledgements…11

Phase One…12
I. Operations…13
A. Saturn Operations…13
1. Overview…13
2. The Skimmer…13
3. Helium-3 Separation Process…15
4. The Lifter…16
B. Titan Operations…17
1. In Situ Resource Utilization Lander…17
a. Description…17
b. ISRU Lander Specs…18
2. Titan Products…18
3. Export…19
C. Space Transportation…19
1. Kiwi 4 Launch Vehicle…20
a. Description…20
b. Kiwi 4 Specs…21
2. Interplanetary Transport Vehicle (IPV)…21
a. Description…21
b. IPV Specs…23
3. Hopper…24
a. Description…24
b. Hopper Specs…24
D. Communications…24
E. Airlock Procedures…24
F. Emergency Procedures…24
II. Physical Structure…28
A. Overview…28
1. Location…28
B. Habitat Modules…29
C. Elevator Shafts…29
D. Docking Port…30
E. Laboratories…30
F. Storage…31
G. Fusion Reactor Module…31
H. Construction…31
1. Material Sources…32
III. Community Design…34

A. Habitat Module Design…34
1. Lighting…35
B. Recreation…35
C. Medicine…35
D. Mental Health…36
E. Government…36
F. Internal Transport…36
G. Networking…36
H. Population…37
I. Education…37
IV. Life Support…38
A. Power…38
1. Polywell Fusor…38
2. Fusion Fuel…39
3. Radiators…39
B. Gravity…40
C. Atmosphere…40
1. Pressure and Mass…41
2. Air Processing…41
3. Air Circulation…41
D. Water…42
1. Water Supply…44
2. Water Treatment…44
E. Food…45
1. Agriculture…46
2. Food Imports…47
3. Food Distribution…47
4. Diet…47
F. Trash…47
1. Collection…47
2. Organic Waste…47
3. Inorganic Waste…47
4. Metallic Waste…48
G. Radiation…48
1. Radiation Hazards…48
2. Shielding…48
V. Phase I: The Story So Far…50
A. Setting the Stage…50
B. The Saturn Development Consortium…50
1. Creation…50
2. Building Maui…51
C. Turning a Profit…52
1. Sources of Revenue…52
a. Helium-3 Extraction…52
b. Rent…53

Phase Two…54
I. Operations…55
A. Titan Operations…55
1. Water Drilling Facility…55
a. Description…55
b. Specs…56
c. Volatile Exports…56
2. Plastic Manufacturing…56
B. Helium-3 Extraction…57
C. Space Transportation…57
1. The Liberty Ship Launch Vehicle…57
a. The ARC Rocket…57
b. The Liberty Ship…58
c. Liberty Ship Specs…59
2. IPV Development…59
3. Intra System Travel…60
D. Communications…60
E. Airlock Procedures…60
F. Emergency Procedures…61
1. Safe Rooms…63
II. Physical Structure…64
A. Transition…64
B. Modules…66
C. Assembly Chamber/Large Zero Gravity Chambers…67
D. Docking System…67
E. Elevator Shafts…68
III. Community Design…70
A. Habitat Module Design…70
1. Lighting…70
B. Recreation…71
C. Medicine…71
D. Mental Health…71
E. Government…72
1. History…72
2. Structure…72
F. Internal Transportation…73
G. Networking…73
H. Population…73
I. Education…74
IV. Life Support…75
A. Power…75
B. Gravity…75
C. Atmosphere…75
1. Pressure, Volume, and Composition…75
2. Air Processing…76

3. Air Circulation…76
D. Water…76
1. Water Supply…78
2. Water Treatment…78
E. Food…79
1. Agriculture…79
2. Aquaculture…79
F. Trash…80
G. Radiation…80
V. Phase 2: The Story So Far…81
A. Building the Internal Economy…81
1. End of SDC Monopoly…81
2. Competitors and Isolationism…81
3. The Mauan Miracle…81
B. The Republic of Maui…82

An Account of the War of Saturn Unification…83

Phase Three…92
I. Operations…93
A. Titan Operations…93
1. The Deep Ocean Borehole…93
2. Titan Exports…93
B. Saturn Operations…93
C. Space Transportation…94
1. IPV Limits…94
2. The Beamrider…94
3. Beamrider Specs…95
D. Communications…95
E. Airlock Procedures…96
F. Emergency Procedures…97
II. Physical Structure…100
A. Transition…100
B. Modules…102
C. Assembly Chamber…102
III. Community Design…105
A. Habitat Module Design…105
1. Lighting…106
B. Recreation…106
C. Medicine…108
D. Mental Health…109
E. Government…109
F. Internal Transport…109
G. Networking…110
H. Population…110
I. Education…110

1. Lower Education…110
2. Higher Education…111
IV. Life Support…112
A. Power…112
B. Gravity…112
C. Atmosphere…112
1. Pressure, Volume, Composition…112
2. Air Processing…112
3. Air Circulation…113
D. Water…113
1. Water Supply…115
2. Water Treatment…115
E. Food…115
1. Agriculture…116
2. Aquaculture…116
3. Livestock…116
F. Trash…116
G. Radiation…116
V. Phase 3: The Story So Far…117
A. Saturn Unification…117
B. The Saturnian Federation…117
1. Branches of Government…117
a. The Legislature…117
b. The Executive…118
c. The Judiciary…118
2. Exerting Authority…118
Phase 4 (Epilogue)…120

Works Cited…122

INTRODUCTION

"Kia hora Te Marino, kia whakapapa pounamu te moana, kia tere te rohirohi i mua i tou huarahi haere e tama haere." (Let peace be widespread, let the sea glisten like greenstone, may your path be straight like the flight of the dove. Go in peace with my blessing.)

~Traditional Polynesian Greeting and Proverb

Executive Summary

At last year's International Space Development Conference, Mr. Jeff Greason, CEO of XCOR aerospace, critiqued the tendency of those who design space settlements to be central planners. He finds that they arrogantly try to design technological, social, and economic infrastructure for colonies of 10,000 plus people without giving a thought as to why the colony is built in the first place. Greason argues that if one looks at past human migrations, colonies always start out small and only become large metropolises after many years of growth, and most of the time, the colony ends up developing along lines completely unanticipated by its founders. As Greason best put it, *"This is science fiction. Nobody has any farking clue what the products and services are going to be on the lunar colony or the lunar settlement or any of the other space settlements past the first initial beginning stages of operation. Our crystal balls aren't that good."* (*Greason, 2012*)

In this spirit, Maui does not seek to be a conventional space settlement proposal. It is not meant to be the first space settlement nor the largest. **Instead Maui tells a story**, the story of how extraterrestrial colonies may grow and develop from ramshackle frontier towns to bustling cities. Maui is the narrative of mankind's first permanent settlement in the Saturn system, orbiting the moon Titan.

This project will be divided into three phases, each taking a snapshot of Maui during a crucial period in its history. **Phase 1** will read like a conventional design proposal. It is a plan for building a **124 person** mining and scientific research base around Titan. It will include not only the engineering details of how this is to be done, but provide a strong economic case for why Terran entrepreneurs will initially invest in the project. The ultimate goal of phase 1 is to create enough of a profit to pay off Maui's initial investment.

Once Maui is sufficiently successful we describe the settlement as it develops along one of many possible lines. **Phases 2 and 3** provide only **one of many examples** of what Mau's path could be. **Phase 2** takes place about 30 years after phase 1 when Maui is a rough and tumble frontier town of over **1831 hardy colonists**. This phase will chronicle the development of long-term life support systems, a domestic economy, and an autonomous political system. We will then end our project with **Phase 3**. Taking place many decades after phase 2, phase 3 envisions Maui as a bustling metropolis of **over 10,001 people**. By this time Maui will no longer be the only colony around Saturn but will instead be the capitol of a confederation of the dozens of other settlements in a united Saturn system.

Maui's greatest challenges will be exerting its political control over such a large sector of space and dealing with a rising population within the finite

environment of a space habitat. **All in all this quite a change for something that started out as a glorified ISS orbiting Titan!**

The writers of this project must reiterate **that only phase 1 is meant to be viewed as a concrete plan**. It is meant to be implementable in the near term with technology that we believe will be available in the next 10 to 30 years. Anything beyond that is educated speculation. Phases 2 and 3 could and probably will turn out to be completely unlike anything we predicted. The intent here is to give the reader an appreciation for the technological, social, political, and economic factors that can make a colony a success or a failure. **Whatever the future may hold, the ride there will certainly be interesting, come along with us.**

Why Saturn?

Earth is approaching a major crisis, in less than 50 years the world's reserves of oil and natural gas will run out, forcing our civilization to either find a new source of energy, or face a new dark age. Current thinking on how to avert this disaster focuses on renewable sources of energy like wind, solar, and geothermal energy. These systems will definitely play a roll in the future, but it is the opinion of the authors of this proposal that renewables will ultimately not be able to fully support industrial civilization in the long run. Renewables are intermittent and unreliable, the wind doesn't always blow and there will always be cloudy days. Valid solutions like space based solar power and airborne wind turbines have been proposed to get around these issues, but they still run into an even greater problem, scalability. The entire human race consumes about **16 terawatts** of power a year, and this number is growing. (*Shannon, 2009*) With the best solar panels available, it would take something like covering 10% of the state of Nevada in solar panels to supply America's *current* demand for electricity. On Earth this would be a massive construction effort, unlike anything seen during the days of the New Deal. If the array were comprised of solar power satellites, it would be the largest space project ever attempted by mankind, requiring thousands of rocket launches to move the people and equipment into space to build these large arrays. The largest thing humanity ever built in space, the ISS, is the size of a few football fields and took nearly **20 years** to complete, it is doubtful enough SSPS platforms could be built in time to supply the Earth with power when fossil fuels run out. Wind and geothermal do not fair much better. Wind is limited to areas with constant strong winds. Geothermal can only implemented in the handful of areas with the right geology for it.

There is one more option for a sustainable energy future, the nuclear option. When nuclear **fission** reactors were developed in the 1950s, they were promoted as safe and unlimited sources of energy. With a reactor the size of shipping container, one could power a large city for years. Although uranium is rare on land, over 4.5 billion tons of it exists in solution in the oceans of the world, enough to keep the pace with the world's current rate of growth for millennia (*Levitan, 2012*). Unfortunately, for all of its potential, nuclear fission power is too dangerous to solve the world's energy crisis. Fission reactors operate under very specific conditions, if anything goes out of check, the whole reactor can fail catastrophically. Even with the best safety protocols and redundant systems, the Three Mile Island, Chernobyl, and Fukishima disasters still happened, harming millions of people around the world. Even when

everything goes well, fission reactors produce waste that is lethally radioactive for many thousands of years. No previous civilization has ever had to deal with such a long-term responsibility, and it is almost certain that some day the waste will escape from its containment site.

The best solution for our energy needs would be a source of power that combines the energy density of nuclear fission with the low ecological impact of renewables. Such a solution exists, **nuclear fusion**. While nuclear fission is the controlled decay of heavy elements into lighter ones, fusion is the reverse of this process, combining lighter elements into heavier ones. There exist many types of fusion reactions, but the best ones for future civilization are called **aneutronic fusion reactions.** To put it simply, aneutronic reactions do not produce any neutrons as byproducts. This is important because neutrons often go by another name, **nuclear radiation**. Yes, an aneutronic nuclear reaction would create no radiation. There two most workable aneutronic fusion reactions are the Boron-11/proton reaction and the Helium-3/Deuterium reaction.

$$p + {}^{11}B \rightarrow 3x\,{}^{4}He + 8.7\ MeV$$
$${}^{3}He + D \rightarrow {}^{4}He + 18.3\ MeV$$

The Helium 3 reaction is the best for two reasons, first it produces more energy, and second it has a lower **Lawson Criterion** than the boron-11 reaction, meaning that it is much easier to get helium-3 to undergo fusion than boron-11. The main problem with the helium-3 reaction is the scarcity of its fuel. While boron-11 is commonly found in the Earth's crust, the amount of helium-3 on Earth is measured in dozens of kilograms, making it one of the most rare substances in existence (Deuterium is commonly found in seawater). It can be found embedded in lunar regolith, but you must first heat the lunar rocks to many hundreds of degrees Celsius to "bake" the helium-3 out. It has been estimated that the amount of energy required to harvest lunar helium-3 would **be more than the energy the helium-3 would generate**. (*Chung, 2012*)

Fortunately, the atmospheres of our solar system's gas giants contain massive resources of helium-3. Even though the concentration ratio is measured in parts per billion, these planets are so massive that the actual mass of helium-3 on any one exceeds the mass of Earth's own atmosphere.

The Maui design team chose Saturn as the site of a helium-3 extraction operation for three main reasons; **low gravity well, absence of radiation belts, and proximity to Earth.** At first, Jupiter would seem to be obvious choice because its atmosphere is the largest. However its immense gravity field would make launching the helium-3 out of the planet difficult. What ultimately caused the team to reject Jupiter are its immense radiation belts. They make Jupiter the most **lethally radioactive place in the solar system** wreaking havoc to not only humans, but electronics as well. Saturn does not have these problems, its escape velocity is around 10 km/s less than Jupiter's and its radiation environment is comparatively benign. Uranus and Neptune have higher concentrations of helium-3 in their atmospheres, but their extreme distance from Earth put un-needed strains on the operation. Mining at Uranus or Neptune would dramatically lengthen the time the helium-3 must spend in transit back to Earth. We want Maui to turn a profit as soon as possible, so the ability to quickly transport the helium-3 to market takes precedence. (*Chung, 2012*)

Compared to building massive solar power satellites, mining enough helium-3 to turn a substantial profit is a surprisingly small operation. It would only take around **25 tons** of helium-3 to power the U.S. for a year (*Barnett, 2008*). 25 tons is the typical payload of a medium lift launch vehicle and handling a payload of this mass is well within our capabilities. Helium-3 is also highly profitable with the current market price being about $3 billion per ton (*Barnett, 2008*).

This all depends on the existence of fusion reactors on Earth and later in the solar system at large that can actually make power. The authors of this proposal feel that fusion power is much closer to being a reality now than it ever was before due to advances in reactor design. Of particular importance to Maui is a technique known as inertial electrostatic confinement (IEC) fusion, also known as Polywell fusion. The Polywell was invented in the 1990s by fusion pioneer Dr. Robert Bussard and its development has been funded by the office of naval research ever since. In a nutshell, the Polywell initiates fusion by creating a massive negative potential at its center that draws in positively charged fuel ions and causes them to smash into each other and fuse. Multiple independent tests have validated the Polywell's basic theory of operation and there is no theoretical or practical reason as to why a sufficiently large Polywell could not make net power. (*EMC2 Fusion Development Corporation, 2012*)

Why Maui?

Maui-tikitki-a-Taranga is a figure from Pacific Island mythology. When Maui was young the Sun moved much more quickly through the sky than it does now. This caused the days to be so short that people could get nothing done before it was night. Maui believed that things should be different and set out with his brothers in a war canoe. They sailed for many days until they finally reached the home of the Sun in the East. There Maui and his brothers waited behind the high walls that surrounded the pit where the sun slept each night. At dawn, as the Sun started to rise into the sky, Maui gave the order for his brothers to throw nets around the Sun. The Sun resisted as Maui jumped on top and beat the Sun with a club made from the bones of his ancestors. After a long and protracted fight, the Sun became tired and relented, fearing for its life it agreed to move more slowly through the sky and was let free. Celebrating their victory, Maui and his brothers went fishing in their canoe.

After a few hours, Maui's brothers all caught fish, and began to taunt their younger sibling for being so brave yet catching nothing. Maui told them that he would catch the biggest fish anyone had ever seen and cast his hook into the water. Suddenly Maui got a bite and started to pull on his line. As the fish emerged from the water, it became clearly apparent to the boys that this was a fish unlike none other. The fish was so big that it wasn't even a fish ***it was an island!*** To this very day, each of the different Polynesian tribes claims that it was ***their*** home island that Maui pulled up from the bottom of the ocean. (*Grey, 1854*)

What does the legend of Maui have to do with the Maui space settlement? To answer this question, we must uncover the significance of Maui's exploits. When Maui restrained the Sun, he brought it under man's control, *harnessing the power of the Sun* to benefit mankind by making the days longer. Maui the space settlement's primary economic activity is mining Helium-3 from the atmosphere of Saturn. The

Helium-3 will be used to fuel fusion reactors on the Earth and in space, putting the power behind the Sun in the hands of man.

What about the story of Maui's "fish"? When Maui pulled up an island from the ocean depths he literally created land where there was no land before. In it's own way our Maui accomplishes just what the historical one did, building new land in what was once the emptiness of space. Instead of being an island, Maui will be an entire world unto itself, a new nation rising amongst the heavens.

Mythological considerations aside, the name Maui also has much to do with the sense of humor of the station's original settlers. Titan is one of the coldest places in the solar system with lakes of liquid methane and propane. The name Maui stuck for so many years because the Mauans were proud of their little inside joke; having a tropical sounding name in such a frigid environment. In the early days of the colony, much entertainment was had watching naïve immigrants looking for palm trees and surfboards but only finding methane hydrates.

Acknowledgements

We would like to thank our parents for supporting us and offering guidance during the design effort. We would also like to thank our sponsor Mr. Jeffry Rose for making sure that our design always remained science fact. A special thanks goes to Dr. Andrew Nagy of the University of Michigan for his help in designing aircraft that can fly on Saturn. Finally we wish to thank Mr. Al Globus and all of the other judges for making this competition possible and taking the time to look through our work.

Phase 1
(2057-2070)

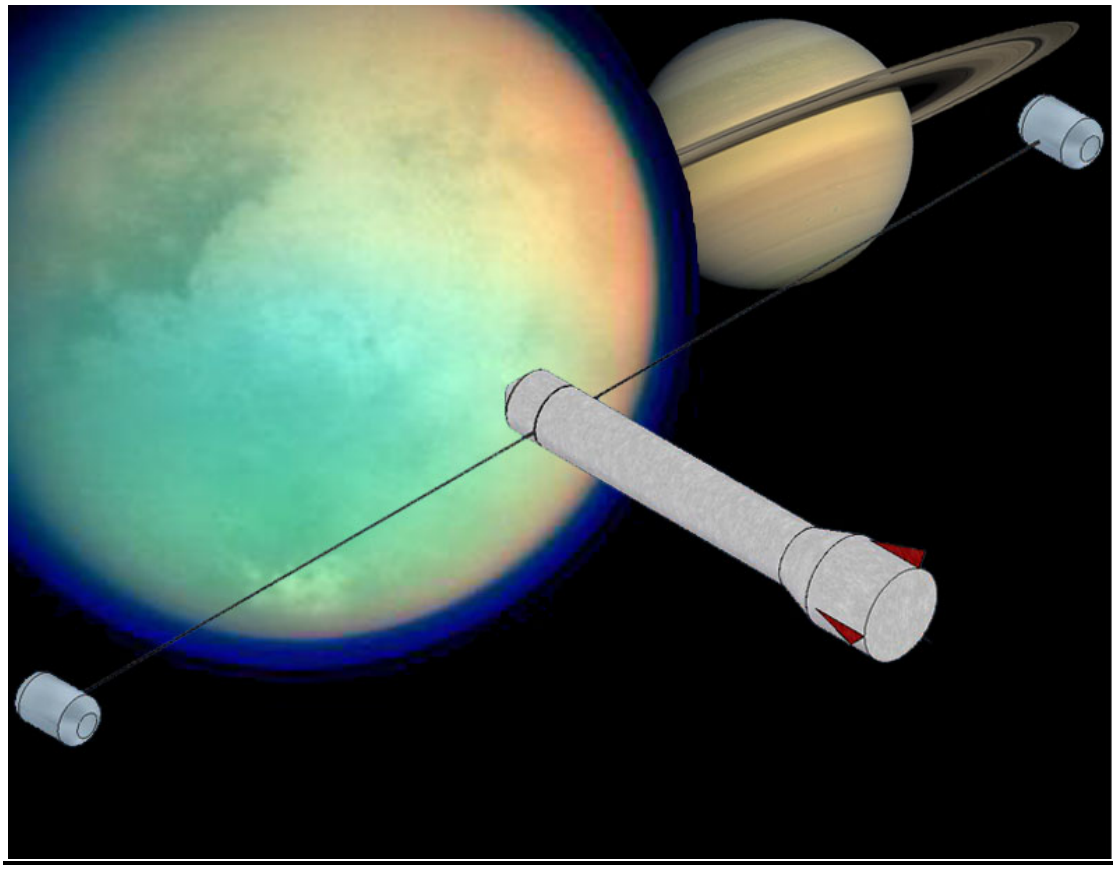

I. OPERATIONS

A. Saturn Operations

1. Overview

Maui's primary reason for being is to serve as a base for helium-3 mining operations in the atmosphere of Saturn. Two different vehicles were originally used for the mining operation, the **skimmer and the lifter**. The skimmer was a large heavy craft that was permanently stationed in Saturn's atmosphere, separating out helium-3. When it had collected enough helium-3, the skimmer would rise to the upper reaches of Saturn's atmosphere and rendezvous with the lifter. The lifter was a much lighter craft that had enough of a thrust to mass ration to carry the helium-3 into low Saturn orbit. Both the lifter and the skimmer were forms of **airship** because buoyancy is the most energy efficient way to stay aloft; this is particularly important when there is no ground to land on. In addition using an airship as an orbital launch vehicle reduces both the fuel requirement for getting to orbit and the danger of a hypersonic reentry.

2. The Skimmer

The formula relating an object's buoyancy to the amount of mass it can carry is

$$(\rho_o - \rho_i)V = m$$

- ρ_o = Density of fluid outside of object
- ρ_i = Density of fluid inside object
- V = Volume of fluid displaced by object floating
- m = Mass of object floating

As long as the fluid outside of your buoyant object is less dense than the fluid inside of it, the object will float. This is difficult on Saturn because the atmosphere is mostly made up of hydrogen **the lightest element in the universe**. The only way to float in a hydrogen atmosphere then is to use a **thermal airship**, by heating the interior of the gasbag; the interior density will drop enough so that the airship will float.

The Skimmer weighs in at about 350 metric tons, about the weight of a fully loaded C-5 Galaxy transport jet. This mass represents not only the weight of the airship structure, but the helium-3 separation and storage equipment. If the Skimmer operated at the 1 bar altitude in Saturn's atmosphere and used the same density differential as a hot air balloon, the Skimmer would need to have an envelope of 2.625×10^7 cubic meters, or about 132 *Hindenbergs*! This would truly be a monster of an airship and it would be very difficult to put such a large object in Saturn's atmosphere in the first place. For this reason, the Skimmer will be what is known as a **hybrid airship**. A hybrid airship is a vehicle in which part of the mass is supported by buoyancy and part of the mass is supported by lift from conventional wings. As a hybrid airship, the Skimmer faired better in Saturn's atmosphere than if it had been a normal airship. It was able to stay aloft without expending a great deal of power but had the maneuverability to avoid Saturn's dangerous and turbulent windstorms.

The formula for the force of lift on an airplane is

$$F_L = mg = \left(\frac{L}{D}\right)\left(\frac{Cd}{2}\right)A\rho V^2$$

- mg = Weight of plane
- $\frac{L}{D}$ = Lift to drag ratio
- Cd = Coefficient of drag
- A = Aircraft frontal area
- ρ = Density of atmosphere
- V = Airspeed needed to stay in air

Skimmer Overview

Mass	350 Metric Tons
Sources of Lift	• 2/3 of lift is supported by gas envelope (233.33 metric tons) • 1/3 of lift supported by wings (116.67 metric tons)
Power	50 MW nuclear reactor provides power for helium-3 separation and driving the Skimmer forward. Reactor waste heat is used to heat the gas envelope.
Gas Envelope Volume	1.58×10^7 cubic meters
Atmospheric Density at 1 bar Level	0.179 kg/cubic meter
Gas Envelope Density	0.166 kg/cubic meter
Lift to Drag Ratio	15
Coefficient of Drag	0.04
Frontal Area	9×10^9 square meters
Minimum Airspeed	0.0466 m/s

The skimmer is completely automated and a typical mission lasts about 8 months. Originally the aircraft was dropped into Saturn's atmosphere using its gasbag like a massive inflatable heat shield. It then deployed a small nuclear reactor, nearly identical to the one on the Titan processing platform, to make itself 2/3 buoyant and power the electric motors driving it forward. A powerful Doppler radar array or the front of the craft scans ahead for patches of dangerous turbulence in Saturn's unpredictable atmosphere so that the Skimmer's control system can steer the craft away from danger. Once the onboard systems have collected enough helium-3 the skimmer must rise to the 0.1 bar level to meet up with the lifter. This is mostly done using propulsive power because the gasbag risks exploding at these altitudes if the pressure inside the bag is not the same as the pressure outside the bag. After the Skimmer offloads its helium-3 onto the lifter, the Skimmer descends back to the 1 bar level to begin its mission again. (*Nagy, 2013*)

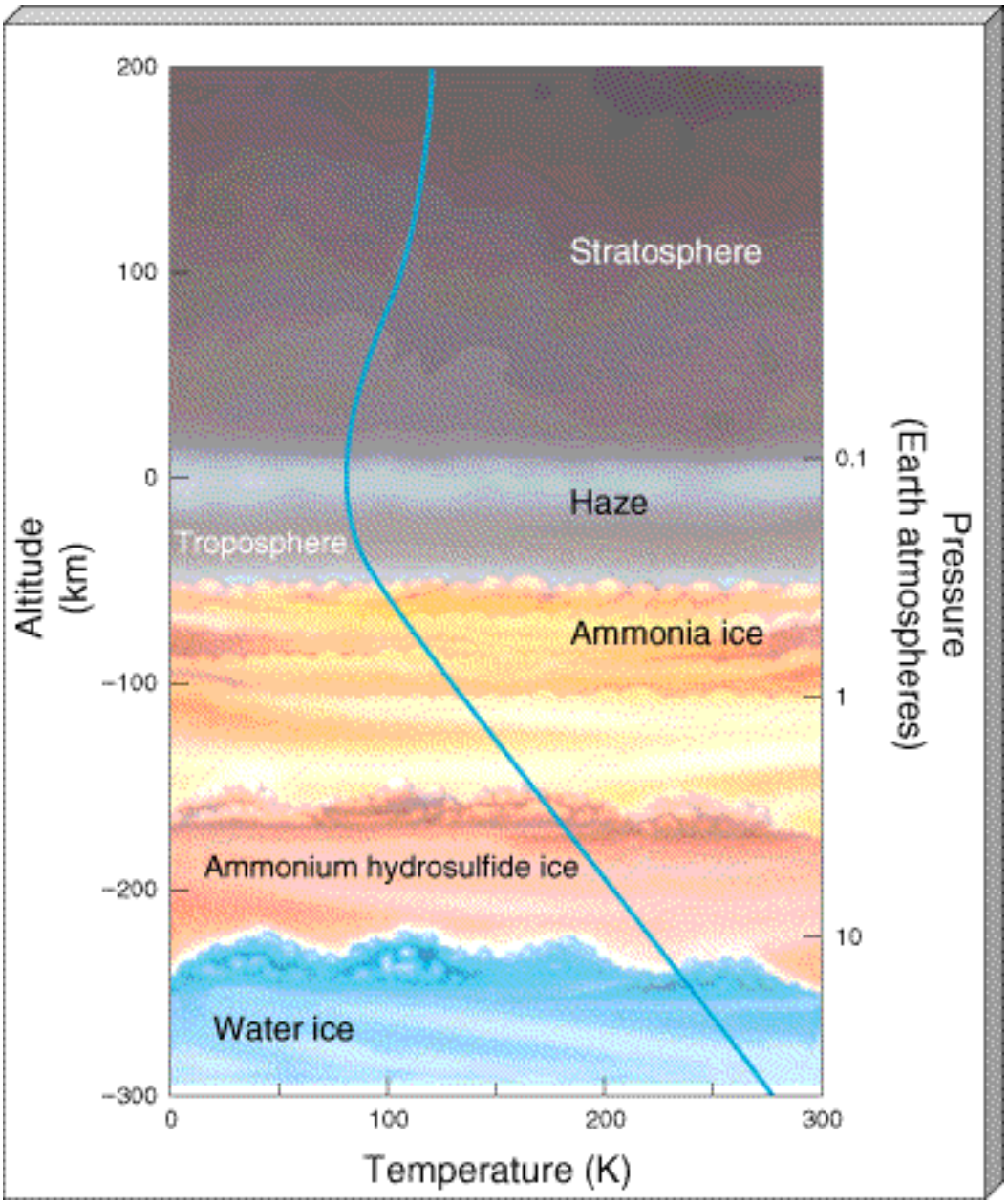

Image Credit:Astrotoday

3. Helium-3 Separation Process

The separation of helium-3 took many steps to accomplish. As helium accounts for approximately **3% of Saturn's atmosphere**, and helium-3 accounted for only .**000173% of all helium**, a large amount of atmosphere needed to be sifted through in order to obtain even a small amount of helium-3. First, pure atmosphere was drawn into the separator. Then, the separator was immersed in liquid helium, liquefying everything in the separator except for the helium. The liquid contents were then removed and moved into a separate chamber. The contents of

both chambers were then transferred to centrifuges that separated the contents out by mass. Since the majority of the mass in one chamber was normal diatomic hydrogen and the majority of the mass in the other chamber was helium-4, there were very sensitive instruments to detect very small differences in the masses of the contents of the centrifuges. In one of the centrifuges, hydrogen deuteride was separated from the rest of the mixture, and in the other, helium-3 was separated from helium-4. The helium-3 and helium-4 were both kept to be sold separately as their uses were quite different. The hydrogen deuteride was reacted with oxygen and allowed to come to equilibrium. This equilibrium consisted of approximately 25% water with two protium atoms, 25% water with deuterium atoms, and 50% water with one each of protium and deuterium. The water was then electrolyzed and pure deuterium was separated out by gas chromatography. The process was then repeated to obtain more deuterium. This process produced helium-3, helium-4, and deuterium to be sold separately in the marketplace. (*Ignatov, 2011*)

4. The Lifter

The Lifter is the vehicle that actually moves the helium-3 from Saturn's atmosphere to orbit. As mentioned earlier, one of the reasons why the helium-3 mining operation was set up at Saturn and not Jupiter, is that Saturn has a smaller gravity well. However, a "smaller gravity well" for a gas giant is still HUGE by Earth standards. The delta-v for entering a low orbit around Saturn is 24 km/s, 10 km/s more than any Earth based launch vehicle! Due to this, the original designers of Maui immediately rejected any form of chemical propulsion for the lifter. To launch a 100 kg payload into Saturn orbit would have required a monster 5-stage booster massing in at 45,000 kg! (*Nagy, 2013*) A more efficient solution was needed, and the designers ultimately selected the **airship to orbit** concept for the Lifter.

While the Lifter and the Skimmer are both airships, they couldn't be more different. The Skimmer is built sturdy so that it can survive the turbulence of Saturn's lower atmosphere. It also carries many hundreds of metric tons of helium-3 separation equipment. The Lifter on the other hand is a bare bones vehicle consisting of a large gasbag, some thrusters, and a storage tank for a handful of tons of helium-3. It's so light that it is not structurally sound enough to operate in Saturn's lower atmosphere. The Lifter needs to be this light in order to escape Saturn's gravity well.

Lifter Overview

Mass	50 metric tons
Payload to Orbit	15 metric tons
Power	Lithium Ion Batteries
Engines	24 Hall Effect Thrusters
Gas Envelope Volume	1.69×10^7 cubic meters
Atmospheric Density at Operating Altitude	0.037 kg/cubic meter
Gasbag Envelope Density	0.034 kg/cubic meter

The Lifter begins its mission in the upper reaches of Saturn's atmosphere at about 42,672 meters above the 1 bar level. As it drifts through Saturn's jet streams, the Lifter recharges its onboard batteries using small turbines along its exterior. Eventually, the Skimmer will meet the Lifter and the two will link up using equipment similar to that used for **in-flight refueling.** The helium-3 and reaction mass for the electric thrusters will be pumped into the Lifter and the Skimmer's onboard reactor will top off the Lifter's batteries.

Once the helium-3 is onboard, the Lifter will rise to an altitude of 60,960 meters above the 1 bar level. This is done to minimize air drag on the Lifter as it ascends into orbit. Over a series of weeks, the Lifter uses its low thrust electric thrusters to slowly accelerate to orbital velocity. By using low thrust, high efficiency propulsion over a long period of time, the Lifter is able to efficiently leave Saturn's gravity well without the need for heavy stages. During acceleration, the Lifter uses a small amount of its onboard power to turn the tenuous air in front of it into a plasma, further reducing drag and increasing efficiency. (*JP Aerospace, 2012*) (*Brian Wang, 2011*)

Once in orbit, the Lifter links up with a **Hopper Shuttle** sent in from Maui. The helium-3 is loaded onto the Hopper and taken back to Maui to be shipped out on the next Interplanetary Vehicle. The Lifter then uses its electric thrusters, to slowly decelerate from orbital velocity. Since the deceleration is slow and the Lifter only needs to reach Saturn's upper atmosphere, reentry is relatively gentle. The same plasma drag reduction system used during the climb to orbit is now used to help the Lifter survive the aerobraking. Back in the upper atmosphere, the Lifter again docks with the Skimmer, and the mission begins again.

B. Titan Operations

1. In Situ Resource Utilization Lander

a. Description

The first piece of infrastructure to be sent to the Saturn system as part of the Maui settlement was a large Titan lander. This lander contained an in situ resource utilization (ISRU) plant, a mini factory for processing Titan's resources of **water, methane, and nitrogen**. It was the first component of the colony to ship out because it supplied all of Maui's life support material. In addition, since it took many months to get the helium-3 extraction operation up and running, the Titan ISRU allowed Maui to bring in revenue from day 1 by exporting volatiles to other space colonies.

The lander itself was **based off of the Kiwi 4 launch vehicle**; however, due to Titan's low gravity well, a larger part of the Kiwi's mass could be devoted to payload than to fuel. It was towed to Titan using a **fusion powered Interplanetary Vehicle**. Titan's thick atmosphere made landing easy, creating enough drag to slow the lander down on entry without the need for heavy propulsive breaking.

The greatest challenge of operating a factory on Titan is the extreme cold. Titan averages -179 degrees centigrade, so cold that lakes of methane exist on the surface. It's so cold, that the only spacecraft to ever land there, *Huygens*, froze to

death in the space of a few minutes. The ISRU lander escaped a similar fate through extensive insulation and internal heating. Many of the chemical processes the lander carried out were exothermic and required a great deal of electrical power. A small onboard nuclear reactor powered these processes and the waste heat generated was used to keep the spacecraft warm. Since the ground on Titan is made from methane ice, the heat from the ISRU plant could destabilize it. To prevent this, the bottom of the lander is elevated above the ice on the vehicle's landing legs. Steel piles brought from Earth are driven through holes in the landing pads and frozen into the ground to anchor the lander against wind gusts in Titan's thick (1.5 Earth atmospheres) atmosphere. (*Space.com, 2013*)

b. ISRU Lander Specs

Power Plant	50 MW nuclear reactor
Output (per day)	• 500 kg water (445 kg oxygen, 55 kg hydrogen) • 2 metric tons nitrogen • 2 metric tons methane
Storage	• 150 metric tons water • 150 metric tons methane • 150 metric tons nitrogen

2. Titan Products

As mentioned before, the primary purpose of the Titan ISRU facility is to provide was to provide Maui with a constant supply of volatiles for its life support system. The resources of interest on Titan are…

RESOURCE	SOURCE	USE
Water	Cryovolcanoes/Geysers	• Drinking • Hydroponics • Oxygen for breathing • Hydrogen for rocket fuel and fuel cells
Methane	Atmosphere and Ground	• Rocket Fuel • Producing Carbon Dioxide When Combined With Oxygen • Fuel Cells
Nitrogen	Atmosphere	• Buffer Gas • Coolant • Fertilizer

For the most part, geophysics works on Titan much like it does on Earth, but with one key exception. Titan is so cold, that water ice takes the place of rock and liquid water takes the place of magma. A constant supply of water is vital to Maui's long-term survival, but drilling all the way down to Titan's watery "magma" over 300 kilometers below the surface was beyond the colony's capabilities for Phase 1. Instead, the ISR plant would be placed near a point on the surface where the crust is thin, allowing water to seep up from Titan's interior. **The site ultimately chosen was on the slopes of a cryovolcano** near Titan's equator. In many ways, this was just like how engineers on Earth would build geothermal power plants near volcanoes and geysers to take advantage of the heat seeping up from the Earth's interior.

On Titan, a small fleet of well-insulated robot rovers went out each day to carve out chunks of water ice from the cryovolcano's "lava flows". These chunks would then be taken back to the ISRU lander for melting, purification, and processing. Nitrogen and methane were simply harvested from Titan's atmosphere. Whenever Maui needed a refill of water, nitrogen, or carbon dioxide a shuttle lander would be sent down to the ISRU plant to collect these materials. (*Space.com, 2013*)

3. Export

Despite the ability to be resupplied with volatiles from Titan, Maui's life support systems were designed to be highly efficient, so not all of the ISRU lander's products went to the colony. Most of the hydrogen produced by the ISRU plant was and is still used as reaction mass for the growing fleet of interplanetary vehicles that supplied Maui. Without the ability to replenish reaction mass at Titan, the IPVs would not have been able to carry useful payloads since a large part of the IPVs' mass would have been taken up by reaction mass for the flight back to Earth. Excess nitrogen, oxygen, hydrogen, and methane were sold to fledgling space colonies on the Moon, Mars, and the asteroids. Since the inner solar system is relatively volatile poor, demand was always high, allowing Maui to produce revenue from day one.

C. Space Transportation

During its early days, Maui was not as self-sufficient as it is today. If something broke, the original settlers couldn't just manufacture a replacement part but had to have one immediately shipped in from Earth or risk disaster. Like a fetus connected to its mother, Maui's survival depended on a reliable line of supply to the Earth. This supply line is overviewed below.

ELEMENT	PURPOSE
Kiwi 4 Launch Vehicle	Carries large payloads cheaply, reliably, and frequently from Earth's surface to LEO.
Interplanetary Vehicle: **IPV**	Transports people and equipment from LEO to Titan Orbit.
Hopper	Transports people, equipment, and cargo around the Saturn system.

1. Kiwi 4 Launch Vehicle

a. Description

The Kiwi 4 was a heavy lift, vertical takeoff/vertical landing, and single stage to orbit launch vehicle. It was the workhorse of Earth's space launch fleet carrying thousands of tons of payload into orbit each year, providing logistical support for space outposts throughout the solar system. It burned a mixture of LOX and methane yielding a specific impulse of 377 seconds. Even though a methane-LOX rocket does not have the same specific impulse as a hydrogen-LOX rocket, methane is less expensive than hydrogen and easier to liquefy. Unlike hydrogen, methane is only mildly cryogenic in its liquid form and therefore does not boil out of its tanks like liquid hydrogen does.

Methane's disadvantage in ISP is made up by the Kiwi 4's use of a **plug nozzle** engine. In a regular rocket engine, the fuel is ignited in a combustion chamber and the resultant hot gasses are directed out of a bell shaped nozzle. These nozzles are designed to work most efficiently at a certain atmospheric pressure. Nozzles on the first stage of rockets are optimized for working at sea level and nozzles for upper stages work best in vacuums. Efficiency in a rocket engine matters because it determines how much fuel a vehicle must burn to achieve orbit. To be a single stage to orbit vehicle, a rocket must have a special **mass ratio** of payload and vehicle structure to propellant. If the rocket does not meet the mass ratio, it will end up carrying zero to negative payload into orbit. With methane fuel, it would be impossible for the Kiwi 4 to be a SSTO using rocket engines that are only efficient for a brief period of time; the vehicle would just be too loaded with fuel. **The plug nozzle engine gets around the problem by being able to compensate for altitude and maintain peak efficiency at all times.** Instead of being shaped like a bell, the plug nozzle is shaped more like a gladiator's shield. Fuel is burned around the rim of the shield and the exhaust gasses hug the shield's surface due to air pressure pushing against the nozzle. As the pressure decreases with altitude, the exhaust gasses expand causing the rocket to become more efficient in the vacuum of space (NOTE: at ground level, you want the gasses hugging the walls of the nozzle). It is called a plug nozzle because the dome plugs up the center of the combustion area, like a plug. With this engine, the Kiwi 4 is able to reach orbit on a single stage, with the maximum mass ratio for an SSTO of **33% payload/structural mass and 66% fuel**. (*Hagerty & Rogers, 2001*) (*Bono, 1967*)

The typical mission profile for the Kiwi 4 was as follows. The vehicle was rolled out to its launch pad with the payload already loaded. Since payloads weighing hundreds of metric tons were few and far between, the Kiwi 4 mostly carried many smaller payloads from a wide range of clients. In a passenger role, a passenger module replaced the entire payload fairing of the rocket. This module was capable of being jettisoned during launch in case something went wrong with the Kiwi.

After fueling, passengers and crew boarded the vehicle and the final countdown began. Seconds before ignition, the whole launch area was flooded with many thousand gallons of water in order to prevent the noise of the Kiwi's engine from damaging the launch pad and the vehicle itself. At t-minus 7, the plug nozzle's 46 combustion chambers are ignited and put through final check out. The Kiwi was

designed for up to 10 of these chambers to shut down during flight and the vehicle still carry out its mission. Once the Kiwi passed through the bulk of Earth's atmosphere, only 20 combustion chambers were used for orbital insertion and maneuvering.

Once its orbital mission was complete, the Kiwi used these thrusters to retrograde. The great thing about a plug nozzle is that it also makes a great heat shield with the blunt dome like shape acting like the bottom of a giant space capsule. During reentry, doors closed off the combustion chambers to prevent heat from damaging the Kiwi's interior. The Kiwi used RCS thrusters and small fins to steer itself towards a landing pad and guided itself with GPS and LIDAR. For the final approach, the Kiwi idled its thrust chambers and lands gently on retractable legs just like a spaceship from a 1950's sci-fi movie. After two weeks of refurbishment the Kiwi 4 was ready to be flown again.

b. Kiwi 4 Specs

Payload	400 metric tons (to LEO)
Propellant Mass	2400 metric tons
Vehicle Dry Mass	300 metric tons
Length	30 meters
Diameter	24 meters
Launch Cost	$30 per kilogram of payload

2. Interplanetary Transport Vehicle (IPV)

a. Description

The IPV fleet transported people and equipment from low Earth orbit to Titan orbit. The IPVs were propelled by Inertial Electrostatic Fusion Reactors (IEC reactors) that powered a **diluted fusion product** (DFP) thruster.

The DFP thruster is a rather simple design consisting of an IEC reactor surrounded by a containment sphere. The reactor generates plasma by creating an immense negative electric potential at its center. When fuel ions are injected into the reactor, they accelerate rapidly towards this potential and collide with each other in the center. They collide with such force that they fuse creating hot plasma. This plasma is then channeled out of the reactor core and into the containment sphere. The plasma on its own has high exhaust velocity but little mass and therefore little thrust. To increase thrust, reaction mass is injected into the fusion plasma stream. This causes the reaction mass to become superheated and expand. The combination of fusion products and reaction mass is then directed out of an opening in the containment sphere towards a magnetic rocket nozzle, producing thrust. (*Bussard, 1997, 2002*) (*Bussard and Jameson, 1994*) (*Bussard and Froning, 1998*)

All the DFP engine needs to run is fusion fuel and reaction mass. The first IPVs ran on boron-11 brought from Earth, but converted to helium-3 once Maui's mining operation begun. The reaction mass of choice has always been water because it is more common than reaction masses such as xenon, and can be stored for longer

periods of time than hydrogen. More importantly, water can be found on Titan. From the very first mission, the IPVs have always only carried enough reaction mass for a one-way mission, topping off with water produced by the ISRU plant for the return to Earth.

The generation 1 IPVs was comprised of 3 major subunits, the payload module, the reaction mass/fuel tanks, and the DFP system. The payload module came in two variants, passenger and cargo. The passenger module could carry 65 passengers and crew along with a small amount of payload on the side. The decks of the modules are arranged with "bottom" being towards the back of the IPV and "top" being towards the front. This is done to take advantage of the IPV's constant 0.01 g acceleration during flight. The cargo modules had spaces for both pressurized and unpressurized cargo, with unpressurized cargo simply being lashed onto the IPV's space frame.

Behind the payload module would be the reaction mass tanks. Since the IPV's reactors burned aneutronic fuel, the reaction mass tanks did not act as shielding from the reactor. However, the tanks did surround a small radiation "storm shelter" for use during solar flares. The fuel tanks connected to the DFP system itself. This consists of the containment sphere, the IEC reactor inside, the magnetic nozzle, and waste heat rejection radiators. Since the DFP thruster's internal magnetic fields keep most of the hot plasma from touching the engine's structure, the only significant source of waste heat is generated by cooling the magnetic coils that make up the IEC reactor and nozzle to superconducting temperatures. (*Bussard, 2002*)

The DFP thruster has a specific impulse of 70,000 seconds, making it many orders of magnitude efficient than any other propulsion system. This efficiency allowed the IPV to not only travel between the Earth and Titan in a single stage, but to utilize a continuous acceleration trajectory all the way there. While most spacecraft of the time burned their engines for a brief period of time and coasted for the rest of the way, the IPV fired its engine for half of the trip, spins around in the middle, and fired its engine in the opposite direction for the rest of the trip to slow down. This allowed the IPV to achieve higher velocities and shorter travel times than other types of spacecraft. (*Bussard*, *2002*)

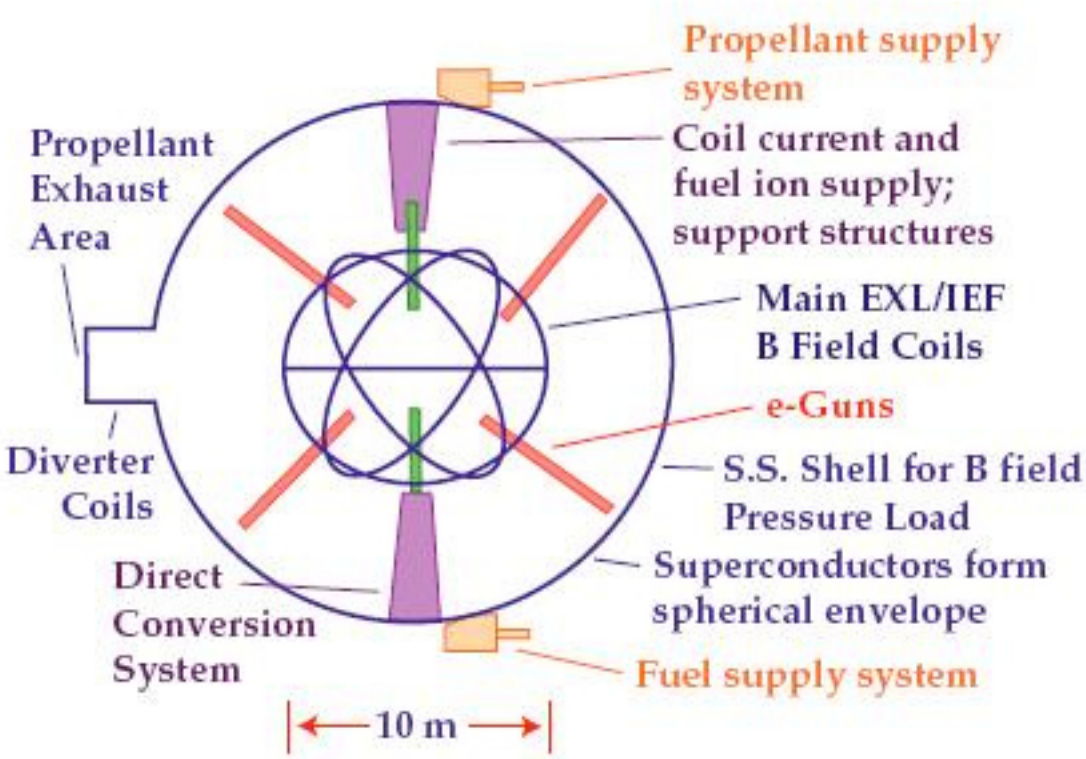

Figure 6 — Schematic outline of DFP engine system

(Image Courtesy of EMC2 Fusion Corporation)

b. IPV Specs

Specific Impulse	80,000 seconds
Flight Time	75-90 days (depending on Saturn's location)
Engine Thrust	69 kN
Vehicle Acceleration	0.01 g
Payload	100 Metric Tons
DFP Mass	100 Metric Tons
Reaction Mass	560 Metric Tons (Water)
Gross Mass	889 Metric Tons
Number of DFP Thrusters	1
Size of Fleet	5 IPVs
Fusion Fuel	• Boron-11 for initial flights • Helium-3/Deuterium for all later flights

3. Hopper

a. Description

The Hopper transported personnel and equipment from Maui to the rest of the Saturn system. It was essentially a scaled down version of the **Kiwi 4** launch vehicle. Even though it was smaller in size than the Kiwi 4, it carried a similar payload because it operated in Titan's weaker gravity field. Like the Kiwi, the Hopper was an SSTO burning LOX and methane. The ISRU lander on Titan produced the fuel for the Hopper. The Hopper was based on the Maui settlement and not on Titan because the moon's cryogenic environment was not a good place to keep something as delicate as a rocket engine for long.

The Hopper's primary mission was linking the ISRU Plant on Titan to Maui. The vehicle's large cargo bay took people and equipment down from Maui and volatiles up from Titan. Part of this included carrying enough methane/LOX fuel to Maui to establish an orbital refueling depot. Orbital refueling gave the Hopper enough delta-v to reach any body in the Saturn system. In fact, one of Maui's original sources of revenue was renting the Hoppers out to research teams who would conduct scientific expeditions to places like **Enceladus** and **Iapetus**. Most importantly, the Hopper was **used to rendezvous with the Lifter airships coming out of Saturn**. The Hoppers would be loaded with the helium-3 harvested by Saturn and move it to Maui for transport back to Earth. To conduct these long range missions, two hoppers were required; one to carry the payload and one to carry methane/LOX fuel for the return trip.

b. Hopper Specs

Payload	400 Metric Tons (Low Titan Orbit)
Propellant Mass	480 Metric Tons
Vehicle Dry Mass	120 Metric Tons
Length	17 Meters
Diameter	9.8 Meters
Size of Fleet	4

D. Communications

The main issue with communicating between Titan and Earth was that the motion of Saturn and Earth along their orbits didn't always allow for a line of sight. This was overcome by placing communications relays at the Earth/Sun L_4 and L_5 points. Even when the Earth and Saturn where on opposite sides of the Sun from Each other, a message could still be relayed. All communications were one-way S-band radio transmissions. The s-band was chosen over higher bandwidth, yet more exotic optical frequencies due to the complexities involved with long distance optical communication. For communicating with other elements in the Saturn system, Maui utilized relays at the Saturn/Titan L_4 and L_5 points. All of these relays were based off of off the shelf communication satellite busses of the day and towed to their locations by IPVs.

E. Airlock Procedures (Going EVA)

Old style space suits, or the Extravehicular Mobility Units (EMUs), used by astronauts for the Apollo and ISS programs were essentially giant, bulky pressure suits equivalent to a balloon. This design **severely limited an astronaut's mobility and flexibility, especially at the joints**. Instead of using these stiff, "miniature spacecraft," all EVAs (extra-vehicular activity) on Maui utilize Bio-Suit technology. The Bio-Suit uses the concept of mechanical counter-pressure to protect astronauts from the vacuum of space. It acts like a tight, form-fitting "second skin" to apply the necessary pressure to the body, except at the head, where a helmet would be worn. (*Newman, 2012*)

The Bio-Suit allows an astronaut to get ready for an EVA in **less than ten minutes** and without need of assistance with an Electric Alloy Remote Sipper Suit, where the suit could be tightened by digital controls at the shoulders. With the Bio-Suit, the thermal controls are more physiologically controlled, where an astronaut's perspiration is collected in an ascorbic fabric, acting like a natural cooling system. Therefore, the only life support systems the astronaut needs to carry on his or her back is an oxygen tank and a carbon-dioxide eliminator. The Bio-Suit's inner layers are easily formed to the body by spraying it on through electrospinlacing, which charges and projects tiny fibers of polymer directly onto the skin, and melt blowing, which liquefies polymer and can be used to apply thin elastic layers. Afterwards, the inner layers would be disposed of. The Bio-Suit is not only a more comfortable choice for a space suit, but a much safer one as well. With a conventional EMU, a small abrasion would be deadly because immediately the suit would depressurize. But with the Bio-Suit, a tiny scratch can easily be fixed with a type of fabric bandage. (*Pitts, 2001*)

Even with this advanced space suit technology, performing an EVA on Maui was dangerous, mainly due to the station's spin. The airlocks located on the modules were heavily controlled areas used only in case of extreme emergencies since the colony had to stop spinning for an astronaut to go outside. Using the airlock located in the center of the colony did not require the cessation of the colony's spin, however it was still going to be seldom used unless there was an emergency. Only with the proper certification and clearance could a person perform an EVA. Therefore, robots would do exterior repairs whenever possible.

F. Emergency Procedures

Scenario	**Response**
Fire	• Sensors located in module detect smoke • Hatches between modules shut to stop the fire from spreading • People inside the affected module locate emergency oxygen supplies and safe rooms • Foam is used to put out the fire
Air Contamination	• Sensors detect contaminant

	• If the contamination is localized, hatches shut off the affected module from the rest of the station. • Emergency oxygen supplies and safe rooms protect residents in the affected module while the air is filtered
Water Contamination	• Backup water loop is brought online • Primary loop is filtered and sterilized
Food Contamination	• Biosensors and human specialists locate source of pathogen • Contaminated food is recalled • Reserve food supplies are accessed • Medical staff alerted
Hull Puncture	• Hatches between modules close to prevent widespread pressure loss • Residents move to safe rooms • If rupture is small, the hull material repairs itself • For larger ruptures, crew members and robots perform an EVA and apply a patch • Module is repressurized and tested for leaks
Power Failure	• Emergency fuels cells are activated • All non-critical systems are shut down • Sensors and engineers locate source of power failure
Equipment Failure	• Backup system is brought online • Components are repaired in the manufacturing module
Disease	• The ill are given medical assistance • If over 15 people are ill, a quarantine is established
Cyber Threat	• If computer system is compromised, backup system is activated • Antivirus program is written
Data Storage Failure	• Backup data cache is accessed

Micrometeorite	• Emergency services deal with immediate problems such as fire, pressure loss, or power failure. • Once the ship has been stabilized repairs are made.
Personnel are stranded in the Saturn system away from Maui	• One of the Hopper's conducts a rescue mission
Onboard Riot	• Shipboard law enforcement detains belligerents. • Long Range Acoustic Devices (LARDs) can be used to deter a mob from damaging shipboard infrastructure.
Stowaway	• Stowaway is sent away with the next available IPV
Coronal Mass Ejection	• Inner solar system based warning system detects flare and alerts Maui. • All EVAs and Hopper excursions are cancelled. • If flare is of a small intensity, inhabitants wait it out inside rxf1 habitation modules. • If CME is of a large intensity, Maui is maneuvered so that the reactor and helium-3 storage modules point towards the Sun. Inhabitants take shelter behind these modules. • If things get really bad, the inhabitants are evacuated to Titan using the Hoppers.
Reactor Malfunction	• Reactor is immediately shut down. • Emergency fuel cells go online. • ISRU plant is programmed to increase hydrogen and methane production to supply the fuel cells while the reactor is being repaired.
Catastrophic Vehicle Failure	• Survivors are evacuated to Earth in an IPV. At least one IPV is kept orbiting Titan at all times for this purpose.

II. PYHSICAL STRUCTURE

A. Overview

The initial structure of Maui consisted of two inflatable cylindrical habitat modules connected by a kilometer-long elevator shaft. At the center of the elevator shaft, on one side were a series of low and zero gravity laboratories and storage areas, as well as a nuclear fusion reactor to power the colony, and on the other side was docking port for accepting incoming spacecraft.

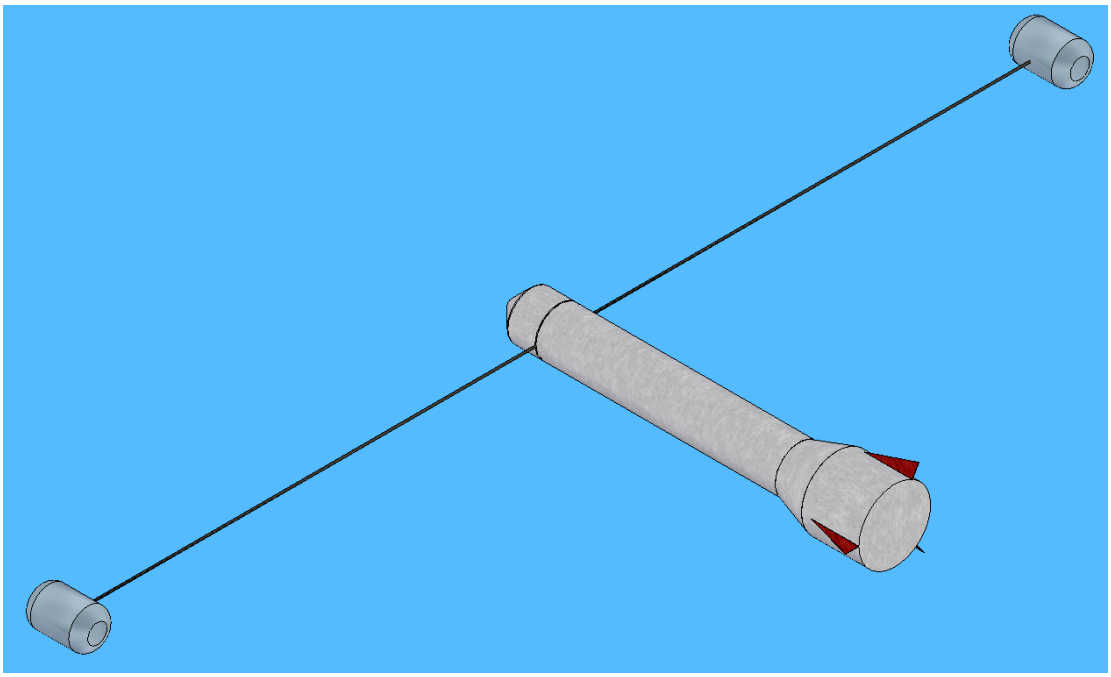

1. Location

Maui followed an orbit 60 km above the surface of Titan. The orbit was inclined 3 degrees with Titan's equator so as to make it easy for the Hopper spacecraft to rendezvous with Maui after launching from Titan.

B. Habitat Modules

The original habitation modules were inflatable and roughly cylindrical in shape, with rounded edges to avoid creating any points of high pressure. **They had a length of 60 m and a radius of 20 m.** They were oriented on their sides in order to reduce the effects of a change in artificial gravity from the top to the bottom. Their skin was made of many different layers serving various purposes such as structural integrity, insulation, micrometeoroid protection, radiation shielding, and others. The core load-bearing "restraint" layer was made of Kevlar in order to support a differential pressure of 1 atm. On the inside of this layer are several bladders that maintained the volume of air inside each module. The innermost layer was made of a durable, fireproof material to protect the structure from internal damage. Outside of the restraint layer, there were several layers of micrometeoroid protection, consisting of layers of polyurethane foam in between several layers of Nextel ceramic fabric. In between many of the layers were sheets of Combitherm, an insulating material used in cooking that had been adapted for use in space technology. (*Kennedy, Raboin, Spexarth, and Valle, 2000*)

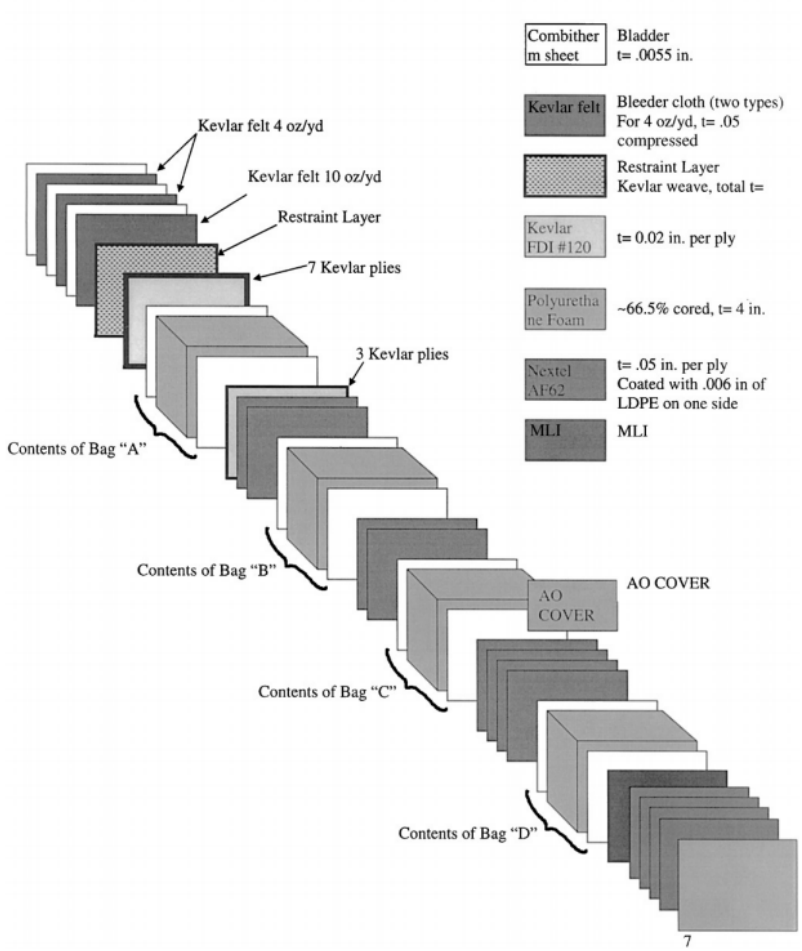

Image Credit: Pergamon

C. Elevator Shafts

An elevator shaft connected the habitation modules to each other. This shaft was actually two elevator shafts at a 180° angle to each other emanating from the central focal point of the colony. They were cylindrical in shape, with a length of **475 m on each side**, for a **total length of 1 km** (when combined with the 50 meter

wide hub) , and **6 m in diameter on the inside**. The walls of the elevator shafts were **30 cm thick aluminum**, coated in a layer of polyethylene for added protection from radiation. There was an elevator in each shaft, and each mirrored the movements of the other so that they were always the same distance from the center in an effort to keep the center of mass stationary so as to not disrupt the rotation of the colony. Because of this, even if only one elevator was needed, both could be used in order to keep Maui spinning on its axis. Each elevator **could lift 2 metric tons** and was designed to handle both the dramatic change in gravity from the center to the module and the Coriolis forces that resulted from increasing tangential velocity.

D. Docking Port

In the center of the colony, where the two elevator shafts meet, off to one side, there was a docking port for accepting incoming IPVs on resupply missions from Earth. At this stage, Maui was not yet self-sustaining, so these resupply missions were necessary to its continued operation. The docking port could only accept one rocket at a time, and used a modified version of the **International Docking System** Standard. This version slowly brought whatever craft docked with Maui to the same rotational velocity as Maui. From the actual docking mechanism, the chamber expanded until it reached a **radius of 25 m.** This served as a "lobby" of sorts for the colony. On the side of this lobby, there was a large door and an airlock for accepting large cargo loads. From the lobby area, people could board the elevators to the habitat modules. (*International Docking Standard, 2011*)

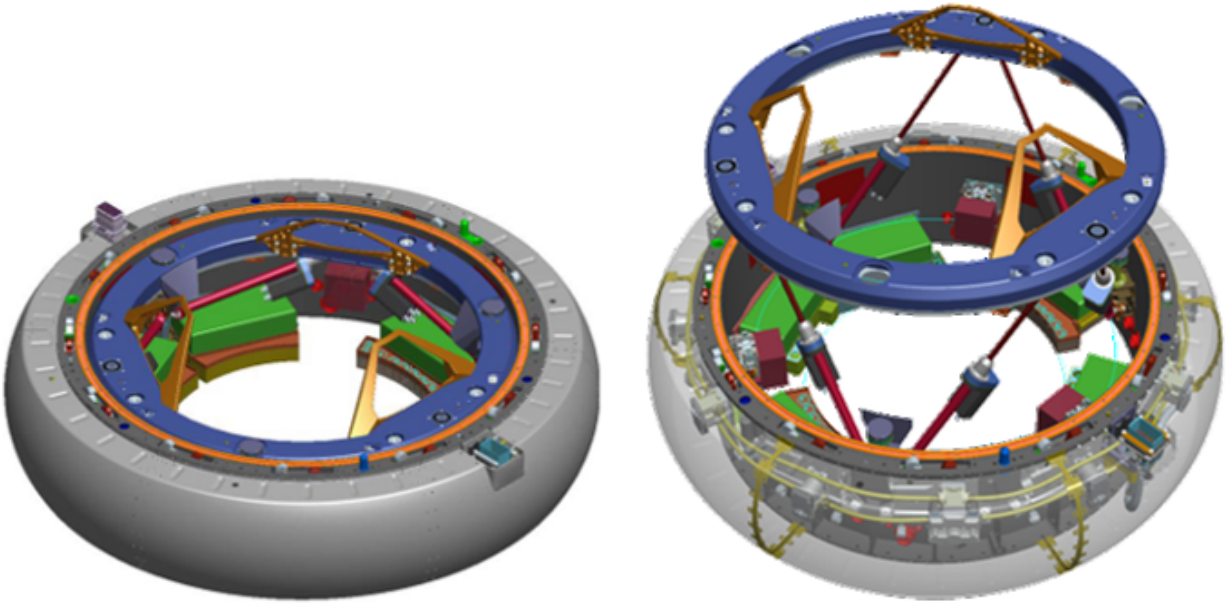

International Docking System Standard *Photo credit: Wikimedia*

E. Laboratories

Adjacent to the lobby area, on the other side of the elevator shafts, there were be **a series of laboratories for scientific research**. Since they were

located toward the center of rotation of the colony, they had very low artificial gravity; in fact, less than the Moon's gravity. There were several levels in this "laboratory module", one with a 50 m radius, one with a 40 m radius, and one with a 30 m radius, which served as a zero gravity chamber. All had the same length of 50 m. The labs on the 50 m level experienced a centripetal acceleration of .94 m/s^2 and the labs on the 40 m level experienced a centripetal acceleration of .75 m/s^2. The zero gravity chamber worked by having platforms that people could stand on that moved against the colony's rotation to cancel out their angular velocity, making the artificial gravity have no effect on them as long as they did not touch any of the walls. To return to the ground, there were nets rotating on the floor that caught people and easily accelerated them to the angular velocity of the colony.

F. Storage

Directly adjacent to the laboratories, still along the axis of rotation, was the helium-3 storage area. This chamber was 100 m long with a 50 m radius, and could store 100 tons of helium-3. In phase 1, not all of this space needed to be utilized, but this capacity would allow for expansion and the storage of other materials and resources. Adjacent to this was another area of the same dimensions for more general storage.

Part of this additional space was originally used as a repair bay for Hoppers and Lifters. A robotic arm on Maui would grab one of these vehicles near the station's docking port and drag it to a large hatch in the storage area. Once the vehicle to be repaired was inside Maui, the storage bay could be pressurized allowing repairs to be made in a shirtsleeve environment.

G. Fusion Reactor Module

The fusion reactor module contained one 315-megawatt Polywell fusion reactor and its support equipment. The reactor itself was kept in a vacuum chamber; the vacuum itself being maintained by a direct opening to space. Since the Polywell burned only aneutronic fuels, no radiation shielding was required.

Fusion products from the reactor were directly converted into electricity using a grid of wires to intercept charged being given off by the reaction. However, most power was still generated by a traditional water loop and turbo generator.

Keeping the reactor and power conversion equipment cool enough to operate safely required the use of massive radiator fins surrounding the reactor module. There were originally 3 triangular radiators attached to the module, each having an area of **280 square meters**.

H. Construction

STEP	DESCRIPTION
1	Land ISRU plant on Titan
2	Place fusion reactor module in orbit around Titan.
3	Attach helium-3 storage area/repair shops to reactor module.

4	Place one Skimmer and 3 Lifters on Saturn. Helium-3 extraction can now begin. For the time being, Maui's crew will live in makeshift quarters in the weightless storage module.
5	Attach laboratory and docking module to Maui.
6	Build elevator shafts.
7	Attach and inflate habitation modules.
8	Outfit interior of habitat modules.
9	Start station spin.
10	Begin regular operations.

1. Material Sources

Since the Saturn system did not yet have an industrial base in phase-1, all of Maui's original components were fabricated on the Earth. They were then launched into space using the Consortium's fleet of Kiwi 4 launch vehicles and flown out to Titan on an IPV. Some of Maui's components, such as the habitation modules, were heavier than the IPV payload advertised in the operations section. However, the heavier payload did not mean that a heavy lift IPV was needed. In space, weight does not matter. Instead a payload's *mass* determines how much force a spacecraft's engines can provide. When it comes to constant thrust spacecraft such as the IPVs, thrust determines the duration of the mission. The fleet of IPVs described in the previous section could transport Maui's major components, but just took a little more time to get there.

Wherever possible, the SDC used off the shelf components. Many of Maui's assemblies, primarily the **habitation modules**, were standard components that had been previously used to build space habitats in the inner solar system.

The one thing that did not need to be brought in from Earth was the volatiles needed to make Maui habitable. All of the air used to inflate the habitation modules, the water used in the aeroponic gardens, and methane for the fuel cells, was mined by the ISRU plant on Titan.

Phase-1 Dimensions

Object	Dimension	Value
Habitat Modules	Diameter	20 meters
	Length	60 meters
	Wall Thickness	0.4 meters
	Volume	7400 cubic meters
	Mass	750 metric tons
Elevator Shafts	Length	500 meters
	Diameter	6 meters
	Wall Thickness	0.3 meters
Docking Port	Outer Diameter	10 meters
	Inner Diameter	50 meters
	Length	40 meters
Laboratory Module	Diameter	100 meters
	Length	50 meters

Helium-3 Storage Module	Diameter	100 meters
	Length	100 meters
Additional Storage/Repair Module	Diameter	100 meters
	Length	100 meters
Reactor Module	Diameter	150 meters
	Radiators	Three 40 meter by 13 meter right triangles
Colony As A Whole	Length	200 meters
	Mass	2.52×10^5 Metric tons
	Moment of Inertia	5.15×10^9 $Kg \bullet m^2$
	Habitable Volume	1.43×10^6 Cubic meters

III. COMMUNITY DESIGN

A. Habitat Module Design

An Antarctic research base inspired the design of the habitat modules because Phase 1 of Maui was modeled after such outposts. The two modules are identical in order to keep the rotation stable. The elevator shaft running to the middle of the modules was used for easy transportation between them. Two spiral staircases running up through each floor were located at opposite ends of the cylindrical modules. The modules could hold 62 people comfortably, but 124 people could fit into a single module in the case of an emergency. Each module had 5 floors, with ceilings that are 7 meters high. Each floor will be dedicated to a specific function:

1. **First Floor: Life Support Services**

   The "bottom" of the modules, or where the gravity is the strongest, was curved since the module was cylindrical. However, the rest of the floors in the module were completely flat. This floor contained the water purification system, the SCWO unit, air and pressure monitors, and one of the two gardens that grew food and plants for carbon dioxide filtration and oxygen production. There was also a large fish tank containing shrimp for aquaculture. Extra space was used for storage.

2. **Second Floor: Living/Recreation**

   This is where the occupants spent the majority of their downtime. Resembling a college dormitory, the floor had one main hall lined with 23 rooms. Sixteen rooms measuring 4 meters by 3 meters housed 3 people, and seven rooms 3 meters by 3 meters housed 2 people. The other half of the floor contained large public bathrooms, one for men and one for women. The bathrooms were equipped with showers, toilets, sinks, mirrors, and lockers for each person to store his or her private toiletries. The middle of the floor had a lounge complete with a pool table for relaxation, a laundry room with 6 washing machines and 6 dryers, and a tiny weight room for fitness.

3. **Third Floor: Cafeteria and Clinic**

   The cafeteria served food only at certain times throughout the day. Each person living in the colony had a specific schedule that he or she followed, ensuring that everyone ate breakfast, lunch, and dinner at different times. The majority of meals were vegetarian-based, with the exception of occasional freeze-dried meats shipped from Earth because there were no animals, except for shrimp, on the colony in Phase 1. Several tables and chairs were scattered the room for dining pleasure. Also located on this floor was the second garden for fresh produce. The clinic was only a small room on the third floor.

4. **Fourth Floor: Work and Research**

   Most of the time on Maui was used for research and mining operations. This floor contained the labs, offices, and computers

that made the colony tick. This floor also contained the consoles and readouts for monitoring the helium-3 mining and ISRU plant. A small library mostly containing reference books and a few entertainment books brought by the occupants was also found here.

5. **Fifth Floor: Elevator Shaft and Airlock**
   The top floor was where the entrance to the elevator shaft that ran between the modules was located. There was also an airlock that opened onto the top of the habitation module here. EVAs made from this airlock were considered risky due to the "gravity" created by the station's spin. It was actually possible to "fall" off of Maui here and be flung into space.

1. Lighting

The interior of the modules had LED lighting, with most of the light concentrated in the offices where people work and in the agricultural areas for plant growth. Storage spaces had dimmer lighting in order to conserve energy. In public areas, lights brightened and dimmed on a 24 hour schedule so there was a sense of night and day, however the lights never fully turned off since some colonists had night shifts and needed to be able to move about the colony. In private dormitories, the residents could control the lighting and turn in on or off to sleep.

B. Recreation

The people living on Maui in Phase 1 will spent the majority of their time researching Titan and the Saturn system and working on the colony itself, so recreational activities were limited. Free time was often spent mingling in the lounge located on the second floor of each module, where people could work out in the small weight room, play cards, hold games at the pool table, or read books from the library. People also went to the center hub of the space colony and participated in zero-g activities for fun.

C. Medicine

Since space was so limited, all medicine on Maui entrusted to two individuals. These individual were internists, specialized physicians of adult medicine. Each of these physicians operated from one of Maui's two closet sized clinics, one clinic being in each habitation module. These clinics were equipped to handle little cases such as broken bones and minor cases. The two physicians were helped in their duties by everyone else on board Maui. Before flying out to Titan, everyone was required to get first responder training.

If a disaster were to happen where a large number of people needed medical care, the two physicians would organize a triage in one of Maui's mess halls, just like on a warship of old. Otherwise, really serious patients would simply be stabilized and shipped back to Earth on the next IPV for proper treatment.

D. Mental Health

Since the survival of the Maui station depended upon all of its inhabitants and crew working optimally, great importance was stressed on psychological health. Before departing for Maui, each visitor was given a thorough psychological evaluation. However, despite this, the occasional mental issue did pop up. The two main mental ailments on board were anxiety and depression. Each condition manifested itself for a wide variety of reasons ranging from the station's extreme isolation to the lack of a truly natural environment to simple homesickness. To deal with this, Maui had a station wide counselor. This individual operated out of an office in one of the habitation modules and provided services ranging from psychoanalysis to being a friendly voice to talk with. The counselor was a trained psychiatrist and consulted with Maui's medical staff and commanders to deal with mental issues before they became disruptive to the station's operations. If a patient became incredibly unstable and posed a threat to him or herself or the station as a whole, he or she would be sent back to Earth on the next available ISV.

E. Government

During its early years, Maui was run by a **commander** who had absolute authority over the station. He or she was appointed by the **Saturn Development Consortium** and was responsible to the consortium's shareholders. Since Maui was also a spacecraft flying under the flags of the consortium's member nations, the commander also had to obey international space and human rights laws.

The commander was assisted by a staff of **12 officers** who served as combination administrators and onboard security force. At this time, Maui was primarily a business venture; so its first priority was to turn a profit, not make a new society around Titan. In addition, most of the onboard population at the time where **transient workers** who lived on Maui only for the duration of their work contracts. It wouldn't be until the Saturn Development Corporation opened up Maui to permanent residency (Phase 2) that some form of home rule would be established.

F. Internal Transport

Internal transport within the habitation modules was simple **you walked**. People got between floors using the **two spiral staircases** in each module, and heavy equipment could be moved up and down the central **elevator shaft**. This shaft was also used to ferry people and equipment all the way to the station's weightless hub. There was also an auxiliary ladder within the shaft in case a power failure made the elevator inoperable.

In the weightless hub of the station people moved about using handrails and foot loops. Some of the handrails were attached to powered conveyor that ran the entire length of the station. This device could drag a person the nearly half a kilometer from the docking bay to the storage area in a matter of minutes. Those who used it jokingly referred to the contraption as "the subway".

G. Networking

The light speed lag meant that Maui did not have access to the Internet on Earth, so an antenna at the hub of the space colony provided a local Wi-Fi network

so that people could share data and media. Each person on Maui had his or her own personal laptop or tablet brought from Earth to use.

H. Population

The population in Phase 1 was 124 people, with 62 living in each module. Space on Maui was very limited, so it had to be kept at exactly 124. Since Maui was primarily a mining/research outpost at the time, the majority of the people onboard were **migrants**. Like workers on an oilrig, they would only stay at Maui for the duration of their contract shifts or research grants. There was a long waiting list of people on back on Earth who wanted to use the facilities of Maui, so it was in the consortium's best interest to shuttle a large amount of people out of the station on each IPV flight in order to make room for new arrivals.

If pregnancy occurred, the clinic was not equipped to provide proper care and there was no room for children in the colony, so any pregnant women had to be sent back to Earth. In the case of death, the body would also be sent back to Earth since there were no means of cremation, and ejecting bodies out of the colony could turn them into dangerous projectiles.

I. Education

Maui's education system will ensure the adult inhabitants will continue their education to incorporate meaningful knowledge to aid them in fitting to the environment. To ensure accident prevention and proper precautions, Maui's inhabitants will learn professional first aid, cardiopulmonary resuscitation (CPR), body mechanics, and automated external defibrillator (AED) training on ground through a physical environment and in space through digital programming. Moreover, the people will be able to further their education by online education. It is critical to empower the people with knowledge for the prosperity of the space colony.

IV. LIFE SUPPORT

A. Power

1. Polywell Fusor

The Polywell is a design for a fusion reactor that is well suited for deep space operations. The design was developed by fusion pioneer **Dr. Robert Bussard** and the Office of Naval Research from the mid 1990s to the early 2010s. The Polywell is an Inertial Electrostatic Confinement or IEC reactor. The reactor itself is comprised of a sphere of metallic donuts. Each donut is actually a steroidal coil of wire, and the donuts must be electrically isolated from each other to prevent arcing and corrosion. When a current is passed through one of the donuts, it generates a ring shaped magnetic field. Multiple donuts operating at once create magnetic cusps that make it impossible for electrons to escape the center of the sphere. A large amount of electrons are injected into the reactor to create a tremendous negative potential at the reactor's center. Fusion fuel is then injected into the reactor in the form of positively charged ions. These ions all rush towards the negative potential at the reactor's center and collide into each other with such force that they fuse.

If an aneutronic fuel is used, the charged positively byproducts can directly be converted into energy. However, the technology to do this was primitive during Phase 1 and could only convert about 1% of the fusion reactor's energy into electrical power. The rest was generated the more conventional way, by using the heat coming off of the reactor to drive a steam turbine.

Photo Credit: (EMC2 Fusion Development Corporation)

IEC does not require the massive magnetic fields of magnetic confinement fusion or the immense laser banks of inertial confinement fusion, meaning that the Polywell can be built in a smaller space and requires less energy to operate than other reactor designs. Fusion reactors of any type are safer than fission reactors because

fusion has much less catastrophic failure modes than fission. A fusion reactor can only operate in a vacuum with a constant supply of fuel or current. If any of these needs are compromised, fusion becomes impossible and the reactor shuts down. (*EMC2 Fusion Development Corporation, 2006*)

2. Fusion Fuel

Initially, Maui's Polywell reactor "burned" boron-11 brought in from Earth. However, this was only meant to be temporary because Maui could not become self-sufficient if it had to rely on a supply line back to Earth. As soon as the helium-3 extraction operation was up and running, Maui's reactor was converted to burn deuterium and helium-3. Not only did this reaction utilize local materials from the Saturn system, but was also **aneutronic**. This meant that no neutrons were released by the reaction, all reaction byproducts being charged particles. Aneutronic fusion reactors can be run without the need for the heavy radiation shielding of neutronic fusion reactors and fission reactors. The equation describing the fusion of deuterium and helium-3 is

$$^{3}\mathrm{He} + \mathrm{D} \rightarrow {}^{4}\mathrm{He} + 18.3\ \mathrm{MeV}$$

If converted into megawatts, the reactor had to burn 2.831×10^{-9} kilograms of deuterium/helium-3 mixture per second to make one megawatt of power. 99% of this energy was in the form of heat while the other 1% was in the form of charged byproducts of the reaction. These charged byproducts could be directly converted into current using a wire grid around the reactor. (*EMC2 Fusion Development Corporation, 2011*). To recover the other 99% of the energy, the reactor's waste heat was be used to boil water, which drove a turbo generator. The turbine had a power conversion efficiency of **60%**, meaning that **61% of the reaction's energy could be turned into electricity**. (*Siemens, 2011*) In phase 1, Maui required **190 megawatts of power to operate**. However, at 61% efficiency, the reactor actually had to produce **312 megawatts** in order to supply the necessary power. Maui's reactor had to consume 0.076 kg of helium-3/deuterium mixture per day, or 28 kg per year, to operate. 28 kg represented a small part of the overall helium-3 output, meaning that the Polywell put little strain on Maui's business operations.

3. Radiators

One of Maui's greatest challenges was to stay cool. The laws of thermodynamics decree that all of the 312 megawatts produced by the Polywell will eventually be lost as waste heat. On Earth, the atmosphere would soak up most of this thermal energy through conduction or convection. However, in the vacuum of space there is no medium to soak up Maui's thermal energy, causing the waste heat to just build up inside the spacecraft. If left unchecked this waste heat would have simply vaporized Maui. To prevent this Maui, like all spacecraft before it, used large radiators to radiate the heat away into space. In Phase-1, Maui had three triangular radiators attached the fusion reactor module. Each radiator had an area of 280 square meters for a two-sided surface area of 560 square meters. The radiators operated at **1600 K** and used water as their working fluid. The water was obtained from the ISRU on Titan.

B. Gravity

Human beings, having evolved on Earth, are accustomed to Earth's gravitational field, and begin to suffer health effects if removed from a constant acceleration for prolonged period of time. With this in mind, the architects of Maui decided to add an artificial gravity system in order to mimic the effects of gravity on Earth. This was done by rotating the colony along its axis at a **constant angular velocity of 0.1373 radians per second, or 1.31 rpm**, according to the equation $a_c = r\omega^2$ where a_c is the centripetal acceleration at a point in the colony, ω is the angular velocity of the colony, and r is the distance from the axis of rotation. Because centripetal acceleration increases with increased radius, the artificial gravity experienced at each point on the colony increased as distance from the center of rotation increased. This rotation was both started and maintained by two VASIMR plasma thrusters on the bottom of each habitat module, facing opposite directions in order to compensate for both increases and decreases in the rotational velocity of Maui. These engines **provided 5 N of thrust each**, and took one and a half days to begin the initial rotation of the colony. At various points throughout the colony, accelerometers measured the effective acceleration at their distance from the center of rotation, and the ion thrusters would adjust the rotation of the colony to account for any deviations from the intended rotational velocity. The intended rotational velocity was selected to provide an acceleration of 9.8 m/s^2 directly to the center of each habitat module, so that neither the top nor the bottom of the modules would experience an acceleration that differed greatly from the acceleration due to Earth's gravity. This was done by setting the centripetal acceleration equal to 9.8 m/s^2 at a radius of 520 m from the center and solving for ω.

$9.8 = 520\omega^2$
$0.0188 = \omega^2$
0.1371 radians per second = ω

Using this value for angular velocity, it was possible to find the effective artificial gravity at any point on Maui. Any person near the top of the habitat modules would experience an acceleration **of 9.423 m/s^2**, and a person near the bottom of the same module would experience an acceleration of **10.177 m/s^2**. This discrepancy was inconvenient, but it was necessary due to the limitations of an orbiting space colony.

C. Atmosphere

Atmospheric Composition

Gas	Percentage
Nitrogen	78%
Oxygen	21%
Carbon Dioxide	0.04%
Water Vapor	0.95%
Other	0.01%

(*Pidwirny and Jones, 2006*)

The air composition aboard Maui is identical to that of Earth in order to simulate conditions most familiar to inhabitants. Excess Oxygen increases chances of fire and can also be harmful to human health. Additionally, if the concentration of the atmosphere were mostly Oxygen, metallic portions of Maui would rust more quickly.

1. Pressure and Mass

The air pressure aboard Maui will be identical to that of Earth at sea level at room temperature, 14.7 psi with an average density of 1.204 kg per cubic meter. In Phase-1 Maui's habitable volume was 1.43×10^6 cubic meters meaning that the internal atmosphere massed in at 1.73×10^6 kg. Shipping all of this air from Earth would be impractical, so all of Maui's atmosphere was produced by the ISRU plant on Titan. In fact, one of the reasons why Titan was chosen in the first place was because it has everything required to make a breathable atmosphere.

2. Air Processing

The majority of the carbon dioxide in Maui's atmosphere was removed through plant photosynthesis. Some of this came from plants being grown specifically to feed the crew while the rest was provided by plants maximized for oxygen production such as algae. Since the Sun is incredibly dim around Saturn, all of the plants had to be grown under special LED lamps that mimicked sunlight. A computer system constantly monitored CO2 levels in the air to regulate gas concentration. If the CO2 level was to high it would instruct the crew to activate tanks of dormant algae spores to make additional oxygen. If the level of oxygen threatened to become too high, the system directed the crew to trim leaves off of plants in order to prevent them from overproducing oxygen.

Water vapor was extracted from the air using a condenser and was added to the drinking supply or used in agriculture. Sensors would shut off the condenser if the air threatened to become too dry. Other potentially harmful contaminants such as dust, smoke, and metal fuels were cryogenically filtered out of the air. The cryogenic filter used helium produced as a byproduct from the Saturn mining operation to chill air until it reached liquid form. The technology was based off the cryogenic separation technology developed for helium-3 mining.

3. Air Circulation

A series of fans circulated air through each module. This was done to prevent the buildup of stale air in any one part of the spacecraft . To carry air to Maui's weightless areas, flexible ducts were inserted into the elevator shafts running to the hub. The ducts were flexible because the closer the duct was to the hub, the less gravity it experienced. A solid duct designed to deal with this difference in force would be too heavy. The flexible duct resembled an inflated tube sock and was kept inflated through its own blower.

D. Water

Daily Water Use Phase 1

USE	AMOUNT PER CAPITA	TOTAL	REASON
Drinking	3 liters	372 liters	This is the amount necessary for an adult human to remain healthy and hydrated.
Showers	30 liters	1800 liters	As water was still strictly rationed in the first phase, people were only allowed to shower three times a week. It was assumed that on any one particular day, at most 60 individuals would be showering. To further conserve water, high-efficiency showers were used that actively regulated the flow of water to meet the bathers' needs.
Faucets	27.5 liters	3410 liters	Faucets were mainly and very conservatively used for hand washing. The average faucet used 11 liters per minute. The system was designed so that an average person could wash their hands 10 times a day and wash them for 15 seconds each time.
Clothes Washing	1 liter	124 liters	Clothes were washed in machines

			that used electrostatically charged polymer beads to attract stains out of clothes. These reusable beads allowed for minimal water usage. The beads were biodegradable. (*GreenBiz, 2009*)
Dish Washing	0 liters	0 liters	Dishwashers used high-energy UV and pressurized CO_2 to sanitize dishes, not unlike hospital sterilization equipment. (*EarthTechling, 2013*)
Toilets	20 liters	2480 liters	Toilets used a mere 1.28 gallons, or roughly 5 liters, per flush. The system was designed to allow 4 flushes per person, per day.
Aeroponics	1 liter	124 liters	Aeroponics drastically cut down water consumption by up to 98%, thus requiring only one liter per day to grow sufficient amounts of produce per person.
Aquaculture	0.5 liters	61.6 liters	40% of the protein eaten on Maui came from seafood raised onboard. This meant that 3079.5 kg of seafood had to be produced each year. Maui's aquaculture tanks used advanced

			filtration and aeration techniques to achieve a density of 150 kg per cubic meter. However, since fish take around four months to come to maturity, only a third of the required seafood had to be cultured at any given time.

TOTAL DAILY WATER SUPPLY: 8371.6 liters

1. Water Supply

Only the water that is absolutely necessary for the journey to Titan was brought from Earth. The rest of the water was harvested by the Titan ISRU plant. Allowing for a two-day purification cycle of wastewater, approximately 25115 liters of water had to be harvested from the cryovolcanoes of Titan before Maui could become fully operational. No additional water was harvested unless absolutely necessary. Although Titan has pure water subterranean oceans, the water for phase one came from cryovolcanoes on the surface; however, this "lava flow" contains high levels of ammonia. This ammonia was extracted from the water through air stripping in a packed tower. The ammonia can later be used to create fertilizers.

2. Water Treatment

All wastewater on the Maui first passed through an anaerobic digester. The digester used bacteria that do not need oxygen to survive to digest the waste and create sludge and methane gas. The methane gas went to fuel cells used to power the SCWO and the sludge went into the SCWO. The super critical water oxidizer heated the sludge with unpurified water under extreme pressure. The waste in the water would literally burn under the intense conditions and leave behind salts, nitrates, minerals, and clean water. (*Savage, 1994*)

Although some of the inhabitants had a predisposition against the nature of the water coming from the SCWO (urine and feces), no luxuries could be afforded during Phase 1. Limited space along with limited output of the Titan ISRU plant made the SCWO the only source of clean water for the inhabitants of Maui.

There was one SCWO in each habitation module. A central plumbing system delivered the purified water to all parts of the module. Pipes could be manually regulated connected the two habitation modules, allowing for the sharing of water in the event of an emergency; the manual controls were made in foresight of a power outage which would render each capsule stranded from the other. Any excess purified water that is not currently in use was stored in a common reservoir on the central truss of the station.

E. Food

Minimum Daily Food Consumables For Phase I

Food Group	Amount per Capita	Total Amount	Examples	Rationale
Fruit	0.36-0.37 kg	44.6-45.9 kg	• Tomatoes • Berries • Citrus	Fruit provides essential vitamins and nutrients. Most importantly is vitamin C, which prevents scurvy, the ancient scourge of all explorers. The antioxidants in fruits also help repair cellular damage due to cosmic radiation.
Vegetables	0.36-0.71 kg	44.6-88 kg	• Lettuce • Spinach • Squash	Vegetables are also a source of vitamins and minerals, the most important being vitamin A, vitamin D, and iron.
Grain	0.14-0.23 kg	17.4-28.5 kg	• Wheat • Rice • Quinoa	Grains contain carbohydrates, which provide the body with energy to function. The fiber in grains is also important for digestive health.
Protein	0.11-0.17 kg	13.6-21.1 kg	• Shellfish • Fish • Poultry	Proteins are the body's building blocks forming muscles and other body tissues.
Dairy	0.61-0.73 kg	75.6-90.5 kg	• Yogurt • Milk • Cottage Cheese	Even though the habitat modules spin to produce the feeling of 1 Earth gravity, many of Maui's inhabitants spent the majority of their working time in weightlessness. The calcium in dairy products helps to mitigate the bone degradation associated with long-term exposure to weightlessness.
Oils	0.02-0.03 kg	2.5-3.7 kg	• Olive Oil • Canola Oil • Animal	Contrary to popular belief, eating unsaturated fats in moderation helps the body process its

			Fat • Butter	own fat.
Spices	0.001-0.005 kg	0.12-0.62 kg	• Curry • Sage • Garlic • Cilantro • Cinnamon	With the assortment of food options available on Maui somewhat limited, spices served more of a psychological than nutritional purpose. Spices will help prevent anxiety and depression onboard Maui by adding some "spice" to the monotony of life.
TOTAL	1.6-2.25 kg	198.4-278.3 kg		

(*USDA, 2013*)

1. Agriculture

When it first became operational, Maui had the capability to provide **50%** of its food supply on its own. Food was either grown aeroponically or raised using aquaculture. Both of these operations took place in the bottom level of each of the habitation modules.

Aeroponics is a method for growing plants without soil, instead the plants grow in a frame with their roots dangling in the air. Every few hours the roots are sprayed with a nutrient rich mist. In Phase-1, the nutrients in the mist were actually some of the byproducts of the SCWO, with the plants forming an integral part of the water reclamation loop (Food to sewage to anaerobic digester to sewage to SCWO to plants to food). Aeroponics was chosen over hydroponics because it required less water and could be set up in a smaller space. The plants were grown in special sealed chambers with a carefully controlled climate. This was done to increase the variety of produce that could be grown onboard, with plants native to one climate growing in one chamber, and plants from another climate growing in another. This way the inhabitants of Maui could enjoy things like kiwi and gooseberries at the same time. Since each growing chamber was relatively small, the gardens were good at growing limited use items like fruits and vegetables, but didn't have the capacity for growing staple crops like wheat and corn.

The other way in which Maui produced its own food was through aquaculture. Aquaculture was chosen over livestock as a source of protein because fish require much less space and resources to raise. Like the aeroponic gardens, Maui's aeroponic tanks also formed part of the closed loop life support system with the fish eating some of the byproducts of the SCWO. Shellfish were of particular use because they could eat the sludge coming out of the anaerobic digester. The byproducts of aquaculture such as fish carcasses and shells could then be sent to the SCWO and passed through the loop again. Unlike terrestrial seafood, the fish and shellfish on Maui were grown in purified water, so the station's inhabitants could eat as much as they want without fear of mercury poisoning.

2. Food Imports

The other 50% of Maui's food supply was imported from Earth via IPV. Most of this food included luxury items such as chocolate, soft drinks, and meat, which Maui just didn't have the resources to produce. Staple foods like rice and flour also had to be imported because Maui's aeroponic gardens just couldn't satisfy the constant demand for these products. Imported food was stored in pantries located in the station's weightless hub. The food would then be moved to pantries near the kitchens when it was about to be used.

3. Food Distribution

Three meals a day were included in the price of a stay aboard Maui. The crew and inhabitants ate in one of the station's two mess halls. Meals were communal affairs and the bonding that happened at mealtime helped reduce stress and anxiety within Maui. Food was cooked in Maui's two kitchens with all food preparation being overseen by a head chef.

4. Diet

Despite having a limited number of ingredients, Maui's kitchen staff was always able to provide good food. What made them excel was their creativity with the ingredients they had available. Using the techniques of **molecular gastronomy**, the chefs performed culinary alchemy. An understanding of proteins and taste receptors, along with different methods of food preparation such as dehydration or cryogenics (liquid nitrogen was always available from the ISRU plant), allowed for one food to be turned into any other food.

F. Trash

1. Collection

In order to conserve as many resources as possible, all trash was collected in a communal bin in each habitation module. Each bin had receptacles for separating waste into organic, inorganic, and metallic components.

2. Organic Waste

Any waste that came from living things or is carbon based was classified as being organic. This was the easiest category of waste to dispose of as it can easily be recycled. All organic waste was either anaerobically digested or processed through the SCWO, creating pure water, methane, fertilizer, and food for the fish.

3. Inorganic Waste

Any waste that is not organic or metallic fell under this category; some examples include glass, semiconductors, and certain types of polymers. The methods to disposing of and/or recycle these materials are varied. Some break down the material using catalysts or other chemicals specific to each material. One idea that was thought of, but never implemented during Phase-1 was the development of a SCWO purposed for the recycling and breaking down of

inorganic materials. The byproducts of such incineration would be basic inorganic compounds that could later be used to create new products. However, for the most part, inorganic waste was sent to Saturn and burned up in the planet's atmosphere.

4. Metallic Waste

Metallic waste was smelted, separated, and recast using techniques that have been around for thousands of years. In fact, metallurgy furnaces were some of the first experiments flown on space stations in the 20th century. The reusing of these metallic resources was vital, since the Saturn system is metal poor. If a metallic component were to break, it was better to fix it than wait for a replacement from Earth.

G. Radiation

1. Radiation Hazards

The two major space radiation threats in the solar system are **solar radiation/coronal mass ejections** and **galactic cosmic rays.** Coronal mass ejections are immense solar flares that spew millions of tons of charged plasma into space. This charged plasma carries enough radiation to kill an unshielded human. Fortunately, the charged particles move slower than the speed of light, allowing them to be detected in advance. Cosmic rays on the other hand are particles thrown off by supernovae. Streaking through space at relativistic speeds, they come without warning, passing between the atoms of most shielding materials like a bullet through mist. Although not as immediately deadly as solar flares, cosmic rays can do immense damage over time. As they pass through human cells, they mutate DNA causing cancer and birth defects. Without adequate shielding, the long-term human habitation of space would be impossible.

2. Shielding

When Maui's designers began to tackle the space radiation problem they had one saving grace, **Saturn's magnetic field**. Saturn's magnetic field is much larger than the Earth's but has a similar field strength of **21 micro Tesla**. Just like with the Earth's magnetic field, Saturn's magnetic field deflects both coronal mass ejections and the higher energy cosmic rays. On its own, Saturn's magnetic field could have provided excellent protection, if it hadn't been for one complication. Titan orbits on the very edge of Saturn's magnetic field. Since Saturn's magnetic field is not perfectly circular, there are parts of Titan's orbit that are outside the field. If a solar storm where to happen while Titan and Maui where out here it could spell disaster. In addition, the galactic cosmic rays are also more intense outside of Saturn's magnetosphere. Over the period of many orbits, the accumulated dose of cosmic radiation would have proved harmful to the Mauans.

For phase-1, the designers implemented a passive radiation shielding system. Every habitable module of Maui was coated in a layer of rxf1, a plastic derived from polyethylene. Metals such as aluminum were not used because they actually give off **secondary radiation** when hit with charged particles, much like how a bullet hitting a concrete wall creates deadly fragments of masonry. **Rxf1 also absorbs 50% more**

cosmic radiation and 15% more cosmic rays than aluminum. It is also 2.6 times lighter and 3 times as strong, allowing it to be used as a **micrometeoroid shield as well. (***NASA, 2005*) The rxf1 was manufactured on Earth and sent to Maui in the form of tiles 10 cm thick. The tiles were attached to the exterior of Maui's modules using an adhesive. Micrometeorite impacts often caused an individual tile to break, so crewmembers performed frequent EVAs to replace them. Towards the end of phase-1, experiments were conducted at the ISRU plant to manufacture an rxf1 substitute using local resources. Since at this point, Maui was a transient mining camp and research base, each crewmember was allotted a liberal dose of **50 rem annually**, or about the same guidelines for NASA astronauts (*NASA, 2012*).

For most solar events, the rxf1 shielding proved more than adequate, but there was always the threat of an abnormally large solar storm. The sun operates on 11-year cycles with solar flare intensity steadily increasing towards a solar maximum. If a large flare went off during such a maximum, the radiation would overwhelm the rxf1 shielding and harm Maui's inhabitants. For such a worst-case scenario, the plan was to maneuver Maui so that it's fusion reactor and helium-3 storage area pointed towards the Sun. The inhabitants would then take shelter in the laboratory and docking module behind these areas and would be protected by the bulk of nearly 200 meters of helium-3 and fusion reactor. In case radiation levels threatened to become really bad, there was a plan to use the Hopper spacecraft docked at Maui to evacuate the inhabitants to Titan where the moon's thick atmosphere would shield them. All plans depended upon adequate warning before the solar event. Warning was provided by a network of satellites locating in the inner solar system. These satellites did not belong to the Saturn Development Consortium specifically, but were launched by various space fairing groups throughout the early 21st century.

V. PHASE I: THE STORY SO FAR

A. Setting the Stage

During Maui's first 20 years in existence, its sole reason for existing was to be a base for helium-3 mining operations throughout the Saturn System. At the time, the Earth was experiencing an energy crisis as the last reserves of crude oil and natural gas ran out. Renewables such as wind and solar couldn't pick up the demand as the world desperately scrambled for an alternative. Research programs carried out through the first three decades of the 21st century had by this time made workable fusion reactors, but the technology was a curiosity at best. Only a handful of huge **tokomak** reactor plants powered some of the world's larger cities. These reactors were **descendants of the ITER project** of the 2020s and were some of the most complex machines in existence, spending as much time in maintenance as they did generating electricity. In addition, the tokomaks burned deuterium and tritium, fuels that are easy to find on Earth, but create neutrons as they fuse. All in all, fusion power plants were shaping up to be no better than fission ones.

In space, the situation was completely different. Fusion propulsion fueled the Mars and asteroid development efforts of the 2020s and 2030s. Engineers were quickly finding out that it was actually simpler to use a fusion reactor as a means of propulsion than it was as a means of power generation. Unlike power plants, rockets do not have to make net electrical power, just thrust, with the fusion plasma simply being directed out an exhaust nozzle. Spacecraft must also be light, driving the development of lightweight reactor designs. It was in the development of more efficient fusion rockets that engineers refined the IEC Polywell reactor, eventually using the reactor design to power the first IPVs between the Earth and Mars. The knowledge gained in the development of IEC fusion technology for space propulsion eventually made it possible to use IEC reactors on Earth. These generation 2 Polywell fusion power plants were smaller, simpler, and more efficient than the earlier tokomaks. However, since deuterium/tritium was still the fuel of choice (boron-11 had too high of a Lawson criterion to be used for power generation), even the new IEC plants created neutrons and hence radiation.

B. The Saturn Development Consortium

1. Creation

It was in this climate that a small group of private firms from the aerospace, energy, and nuclear industries met to discuss the development of aneutronic fusion fuel sources. After much talk, two things became apparent: **1.** Aneutronic fusion reactors were so advantageous that if fuel could be found, they would dominate the energy market, and **2.** Whoever supplied the aneutronic fuel would become fabulously wealthy. Ultimately the group decided that the **helium-3/deuterium** reaction was the best possible option. The only problem was that very little helium-3 existed on the Earth.

It was known that helium-3 existed in greater abundance in space, but the question was where to get it from? The group briefly thought about establishing a helium-3 mining operation on the Earth's Moon, where it had been known for many

years that helium-3 existed in the lunar regolith. This seemed to make the most sense because the Moon is close to Earth and the technology required to reach it had been around for nearly a century. However, it soon became apparent that the lunar operation would be unfeasible. In order to get the helium-3, the regolith would have to be heated to thousands of degrees Kelvin. This meant that it would possibly take more energy to **extract** the helium-3 than the helium-3 would make a fusion power plant.

Eventually, the working group turned their attention to the gas giants, where helium-3 existed in gaseous form there for the taking. The most obvious choice was **Jupiter** due to its nearness to Earth, but its large gravity well and lethal radiation belts would have made operations there very difficult. Ultimately **Saturn** was chosen as the mining site. Even though it is farther from Earth than Jupiter, Saturn has a much smaller gravity well and no lethal radiation belts.

The group knew that the mining equipment would have to actually enter Saturn's atmosphere to collect the helium-3. To be light enough to exit Saturn's atmosphere with the helium-3 this vehicle could not carry a heavy crew compartment and would have to be automated. The problem was that no robotic probe had ever been sent into Saturn's atmosphere before, and it was unknown if a robot could navigate the winds and turbulence.

It was therefore determined that some form of teleoportation capability was needed at Saturn. However, the communications delay between the Earth and Saturn is measured in **hours**, so teleoportation from the Earth was impossible, someone was going to actually need to go to Saturn. Titan was quickly chosen as the obvious location for the manned base because it is rich in the resources needed to support life.

When word got out that the working group was planning on building a small base at Titan, space programs, universities, and adventure seekers showed great interest in using such a facility. The working group conducted a quick survey and found out that even if the helium-3 mining operation did not turn a profit, a base orbiting Titan could support itself financially through rent paid by visiting research scientists and adventurers. With a firm business plan in mind, the working group held a press conference at the **2040 International Space Development Conference**. There it announced the formation new organization, the **Saturn Development Consortium (SDC)**, consisting of the members of the working group along with new partners. Its goal, in 10 years to build an outpost orbiting Titan that would serve as the base of operations for helium-3 extraction and a world class research facility to study the Saturn system.. The SDC named this base **Maui** after a figure from Polynesian mythology who brought prosperity to his people. Little did the SDC know that their press conference would mark the start of a new civilization.

2. Building Maui

Here is a brief timeline of Maui's construction.

- **2040:** SDC announced Maui initiative, organization seeks initial investors.
- **2041:** SDC began detailed design studies with the primary focus being on the helium-3 extraction vehicles.

- **2043-2047:** SDC member firms began fabrication of helium-3 mining components.
- **2045:** SDC purchased 5 **used IPVs from the Earth-Mars run**. These IPVs were modified with enlarged fuel and reaction mass tanks for the voyage to Titan.
- **2046:** Manned survey IPV was sent to Titan.
- **2047:** Skimmer prototype was tested in Earth's stratosphere.
- **2050:** A second manned IPV was sent to the Saturn system with pilot versions of the **Skimmer and Lifter** vehicles. The vehicles entered Saturn's atmosphere on October 1st and returned a "Christmas Present" of 25 kg of helium-3 on December 25th.
- **2051:** SDC received the final round of investment needed to complete Maui. Work began on commercial helium-3 reactors. SDC member firms began fabrication of Maui components.
- **2052:** ISRU plant landed on Titan.
- **April 2053:** Fusion reactor module was put into orbit around Titan along with 1 Hopper.
- **September 2053:** 1full sized skimmer, 3 lifters, and a helium-3 storage tank were sent to Saturn. Commercial helium-3 extraction began.
- **July 2054:** Laboratory and docking modules were brought to Titan and attached to Maui.
- **January 2055:** Elevator shafts were brought to Maui and put in place.
- **July 2055:** Habitation modules were brought to Maui, put in place, and inflated. Artificial gravity spin was initiated.
- **2056:** Shakedown period.
- **2057:** Regular operations begin.

C. Turning a Profit

The SDC only had one goal in mind for Phase I, making enough revenue to cover the initial costs of building Maui. By the time the station began regular operations in 2057, **$15 billion** had been expended on the project.

1. Sources of Revenue

a. Helium-3 Extraction

With the development of commercial helium-3 nuclear fusion reactors, the demand for helium-3 on Earth steadily increased throughout the 2060s. Helium-3 was so energy dense, that each ton was initially worth **$ 3 billion dollars**. At these prices, the SDC was able to pay for the entire project with only one Lifter full of helium-3. The SDC made sure to limit production to only a few dozen tons each year in order to produce an **artificial scarcity** to keep prices high.

The first market for the helium-3 was the space travel business, where it was used as an efficient, aneutronic IPV fuel. Only when the helium-3 supply had been well established, and people on Earth felt that Maui was here to stay, did cities around the world start opening up helium-3 fired fusion power plants. By **2070** fusion was the fastest growing sector of the energy market.

b. Rent

Its initial investment practically covered, the SDC could now divert profits from the sale of helium-3 to further develop Maui so as to make it inviting for future investment. One type of customer the SDC worked particularly hard to attract was the research scientist. The SDC wanted to make Maui a one-stop beachhead for the exploration of the outer solar system. Maui provided a base from which Hoppers could launch from on expeditions to Saturn's moons. It was in this way that the first human feet stood on places such as Enceladus and Rhea. Later, Maui would be used to send out IPVs on expeditions to Uranus, Neptune, Pluto, and the Kuiper Belt. Maui also boasted a first rate research lab where experiments could be performed on all sorts of extraterrestrial samples. Maui's distance from the Earth and all of its radio noise, made the station a heaven for radio astronomers.

All of these parties **where charged a rent** to come to Maui and use its facilities. This included food and transportation to and from Maui. Maui also catered to another sort of clientele, **the adventure tourist.**

Phase 2
(2080-2090)

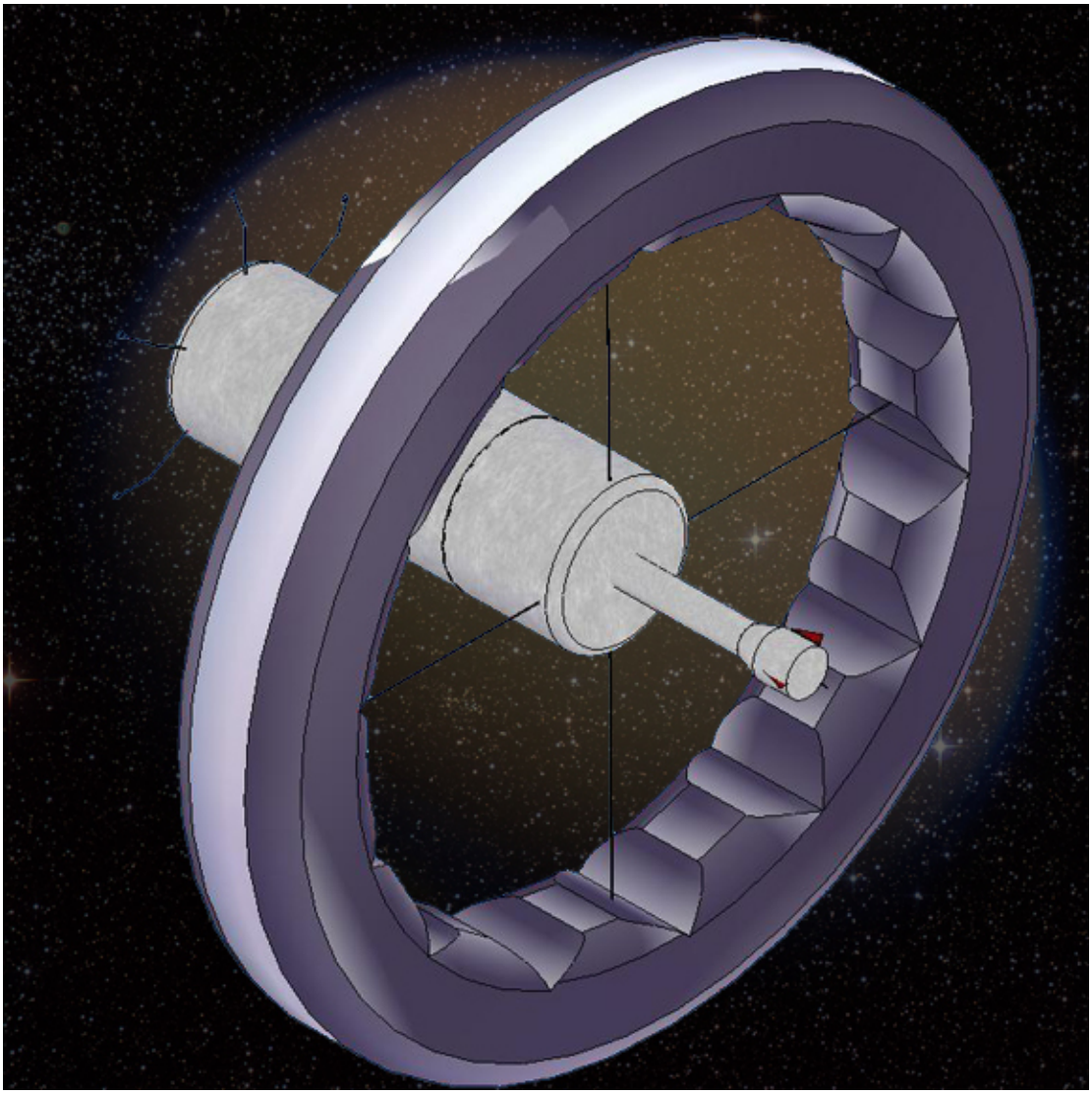

I. OPERATIONS

A. Titan Operations

1. Water Drilling Facility

a. Description

In Phase I water had been harvested on Titan in the form of loose chunks of ice strewn about the slopes of a cryovolcano. The amount of water available at any given time depended on how active the cryovolcano was. This sporadic water supply worked fine for Phase I, but by Phase II was becoming unable to meet Maui's increasing demands for water.

To solve this, the SDC built a new ISRU facility that actually drilled into Titan's interior to reach liquid water. The drill didn't go all the way to Titan's mantle ocean, **but instead to an area where water from the mantle existed near the crust.** On Earth, this would have been the equivalent of drilling into a volcano's magma chamber to extract lava. No physical drill was used, but instead a hot metal probe was used to melt through to the water. Before drilling, cryo-geologists used ground-penetrating radar to locate a suitable water chamber.

Like oil in a well, the water came out under high pressure, and complex plumbing was used to regulate the water's flow. Despite this, drilling for water on Titan was inherently safer than drilling for oil on Earth because there was no risk of fire. Once the water was out of the ground, it was purified and stored in specially insulated tanks. Hoppers would then come down to take the water to Maui.

Unlike the Phase I ISRU plant, which was no more than a lander, the Phase II facility was a more permanent structure. The plant was made out of bricks of carbon fiber and rxf1, all of which were manufactured on Titan. To protect the plant's equipment from Titan's extreme cold, the SDC borrowed a trick from the Inuit and **buried the entire plant in Methane ice**, which acted as insulation. The whole thing sat on piles that were anchored deep into Titan's surface and frozen in place. This was done in order to prevent the ground underneath the plant from melting and destabilizing the whole structure.

The plant also had large air ducts sticking out of the top to collect **methane** and **nitrogen** from Titan's atmosphere.

b. Specs

Power Plant	100 MW nuclear reactor
Maximum Output (per day)	• 100 metric tons water (89 metric tons oxygen, 11 metric tons hydrogen) • 100 metric tons nitrogen • 100 metric tons methane
Storage	• 1000 metric tons water • 1000 metric tons methane • 1000 metric tons nitrogen

c. Volatile Exports

Although not as big as the helium-3 mining industry, the mining and export of volatiles from Titan also brought sizeable revenue to the Mauan economy. Hydrogen, carbon, oxygen, water, methane, and nitrogen were sold to space settlements in volatile poor regions such as the Moon, Lagrange Points, and Asteroids, which desperately needed these volatiles for their life support systems. The trade benefitted Maui more than financially; for providing volatiles, these inner solar system settlements sold to Maui at reduced rates the most rare substance in the entire Saturnian system, **metal**.

Volatiles were mined by private firms operating from Maui. Maui as an entity did not concern itself with mining for export, just mining enough to keep its own life support systems running.

2. Plastic Manufacturing

Another industry that took off on Titan during Phase II was plastic manufacturing. Using abundant hydrogen, carbon, and oxygen found on Titan, manufacturers could make almost any type of plastic.

All plastic making on Titan began with the following reaction…

$$\mathbf{6H_2 + 2CO_2 \rightarrow 2H_2O + 2CO + 4H_2}$$

Hydrogen is reacted with carbon dioxide to produce water, carbon monoxide, and hydrogen. The hydrogen reactant comes from either methane or water and the carbon dioxide is made from burning Titan methane in a special chamber. In order for the above reaction to work, the reactants must be heated to many hundreds of degrees centigrade. After the reaction, the water is discarded, but the carbon dioxide and carbon monoxide are saved for the next step…

$$\mathbf{2CO + 4H_2 \rightarrow C_2H_4 + 2H_2O}$$

Carbon monoxide and hydrogen are reacted with an iron-based catalyst to produce **ethylene** and water. This reaction produces a lot of heat, heat that was used to power the first reaction in the process.

Ethylene is the ultimate goal of these reactions because it is the basic feedstock from which most plastics are made, most importantly, it can be turned into **polyethylene,** the base ingredient in **rxf1**, which forms a large part of Maui's hull.

Other reactions created **propylene**, **benzene, and dimethyl ether**, monomers that all serve as the feedstock for a whole range of polymers like **Kevlar** and **Teflon.** (*Zubrin, 2011, 2008*)

On Maui, these plastics were used to fabricate the modules that made up the station's Phase II expansion. No longer having to rely on Earth for building materials, Maui could now finally expand at its own pace. Mauan plastics were shipped all throughout the solar system, and in many places were the only plastics available. On Earth, the depletion of fossil fuels brought about the end of the petrochemical industry, and Mauan firms were happy to fill in the void left behind.

B. Helium-3 Extraction

The process of helium-3 mining remained virtually the same in Phase II as it did in Phase I with the exception that better automation technology made both Skimmers and Lifters more reliable. What really did change was the amount of helium-3 being extracted. By 2100, humanity consumed around **100 terawatts** of power a year. (*Millis, 2011*) At the time, helium-3/deuterium fusion was not yet humanity's dominant source of power, but still a force to be reckoned with. Helium-3/deuterium fusion contributed around 25% of the solar system's energy supply, requiring an output of around **3661 metric tons of helium-3/deuterium fuel per year.** Since each Lifter carried a payload of 15 metric tons of helium-3/deuterium mixture, 245 Lifter flights were made each year.

C. Space Transportation

1. The Liberty Ship Launch Vehicle

a. The ARC Rocket

Even though the Kiwi 4 enabled for low cost access to space, it was not low cost enough to efficiently supply the payload volume needed for large-scale space settlement. If colonies such as Maui were ever to grow beyond little outposts, they would need a logistics system as reliable and low cost as the airline and shipping industries on Earth. A vehicle was needed that could be mass produced in the thousands and launched without much preparation or special facilities. It would take the further development of fusion propulsion technology along with an increased availability of helium-3 from Maui before this vehicle could be a reality.

Engineers had long known that the ISP provided by a fusion engine would be far superior to a chemical rocket, enabling much better payload to propellant ratios. The only problem was that the **diluted fusion product** thruster, the fusion engine used on all IPVs, produced too little thrust for space launch. However, by the late 2060s advances in reactor design allowed for a new type of fusion rocket, the **All Regeneratively Cooled Quiet Electric Discharge Rocket, or ARC for short**.

Whereas the DFP thruster directly converted plasma from a fusion reactor into thrust, the ARC used an onboard reactor purely to generate electricity. This electricity was then used to power a **relativistic electron beam (REB)**. This intense beam of energy was then used to directly heat reaction mass. The superheated reaction mass

expanded rapidly out the back of the rocket, providing thrust. (*Bussard and Jameson, 1994*)

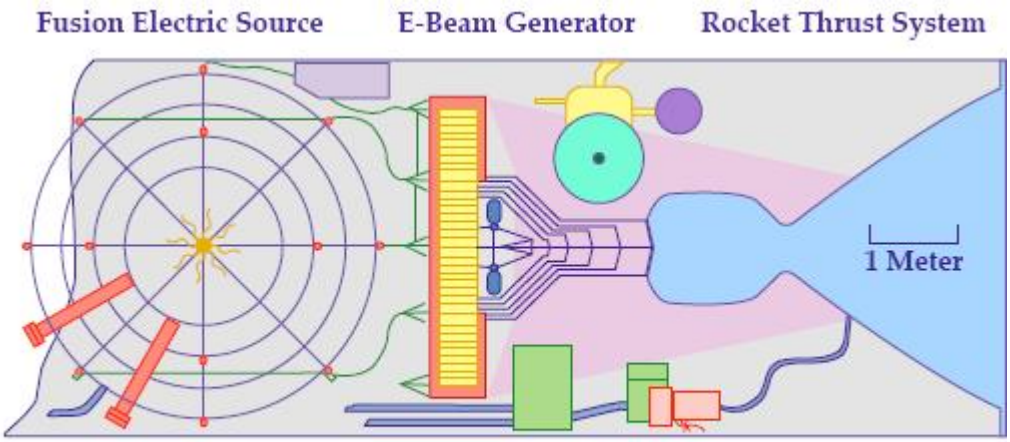

Figure 2 — QED Fusion Rocket Propulsion System.
(Photo Courtesy of EMC2 Fusion Development Corporation)

The primary advantage of the ARC rocket was that it offered the best of both worlds. It could produce the thrust of a chemical engine while maintaining the ISP of a pure fusion rocket. Also, unlike DFP, ARC could operate in an atmosphere because the fusion reactor did not have to be exposed to the outside of the craft. ARC engines could only be built starting in the 2060s because they relied on well-developed power conversion technology, something that DFP thrusters never needed.

b. The Liberty Ship

ARC engines gave engineers capabilities that they could never before have imagined. For the first time, the dream of a rapidly reusable, simple to operate, heavy lift launch vehicle was within reach. The end product of this dream was the **Liberty Ship** launch vehicle. It was named after the liberty ships of the 1940s, which were mass produced merchant marine vessels built in the thousands to move war materiel across the Atlantic to the European Theater. The designers of the modern Liberty Ship hoped that they too would create a product that could be mass-produced and would be used to assault the beachheads of space.

This is exactly what happened as the Liberty Ship opened up space like never before. In appearance, the Liberty Ship looked very much like the Kiwi 4 with the exception that a greater fraction of its mass was devoted to payload. Unlike the Kiwi 4, the Liberty Ship was powered by only a few kilograms of inert helium-3 and used water as reaction mass, meaning that only a simple infrastructure was required to prepare the vehicle for launch. The fact that neither the fuel nor the reaction mass was explosive greatly increased vehicle safety. The ARC was also much more controllable than a methane/LOX plug nozzle, a simple potentiometer could be used to control the intensity of the REB. This meant that the Liberty Ship could throttle its engines down so low that it could take off and land without the use of a water suppression system.

c. Liberty Ship Specs

Payload	1000 metric tons (to LEO)
Reaction Mass	2700 metric tons (water)
Fuel Mass	0.11 kg (helium-3/deuterium mixture)
Length	30 meters
Diameter	24 meters
Launch Cost	$10 per kilogram of payload
Specific Impulse	3000 seconds
Total Thrust	4 million newtons

2. IPV Development

What distinguished the IPVs in use during Phase II was not their technical advancement, but their specialization. The multi-use crew/cargo IPVs from Phase I gave way to a whole fleet of vehicles for different roles, with passengers and cargoes flying on separate spacecraft. Unlike humans, most cargoes didn't degenerate in zero gravity and didn't require complex life support systems. This meant that cargo vehicles could travel to their destinations more slowly than passenger ones, lowering the amount of reaction mass required to travel to a destination.

Passenger craft on the other hand were built for human comfort with amenities comparable to an ocean liner. These luxury IPVs allowed for the development of an interplanetary tourism industry.

Another type of manned IPV developed was the **Research Ship**. This was an IPV with the capability to conduct long term, manned expeditions to any destination in the solar system. These vessels were combination spacecraft and research base, having to both be able to fly out to unexplored regions of space and carry all of the equipment needed to keep an expedition team alive while there. In the final 20 years of the 21st century, Research Ships took the first humans to places such as **Uranus, Neptune, Pluto, and the Solar Gravitational Focus**.

By the 2070s, DFP engines had been improved to the point that IPVs could achieve accelerations of 0.15 g. This level of performance required the IPV to carry an extremely large amount of reaction mass, increasing the costs of operation. The expense caused these types of craft to be limited to VIP use by the rich and powerful.

All of these vessels served the rapidly increasing amount of interplanetary traffic. By the late 21st century, thousands of people were going into space each year to immigrate, conduct business, or go on a vacation. Maui, as a center for helium-3 production, was a major hub. Most of the traffic consisted of tanker IPVs coming to transport helium-3 back to the inner solar system, but Maui was also the port of entry for all passengers going to destinations in the Saturn system. To accommodate this increased traffic, the SDC constructed a large **docking facility** at Maui's hub. The facility could berth multiple spacecraft at once, whereas the docking port during Phase I could only house one spacecraft at a time.

3. Intra System Travel

ARC rockets allowed for a new generation of Hopper vehicles that could make routine flights to any destination in the Saturnian system. In Phase I, if a Hopper needed to perform a long range mission, two Hoppers would actually have to be used; one to take the payload and another to bring the methane/LOX fuel for the return trip. This caused any mission outside of Titan's immediate vicinity required months of planning. ARC powered Hoppers ended this problem because all they only needed helium-3/deuterium and water to operate. The fusion fuel made up such a small amount of the Hopper's mass that enough for multiple round trips could easily be pumped into the Hopper's fuel tanks at Maui. Water, unlike methane, was common on virtually all of Saturn's moons in the form of ice. Hoppers could fly to a destination with only enough reaction mass for a one way trip and use a portable ISRU plant to melt enough water for a return trip.

Such flexibility opened up the rest of the Saturnian system to development, enabling industries to start at places like **Enceladus and Rhea.**

D. Communications

Around this time period, the satellite relays at the Earth-Sun L_4 and L_5 points were updated. New satellites with much larger data capacity replaced the older, out-of-date ones. These new satellites also had the added benefit of using **optical communication** rather than radio waves. This allowed more data to be transferred at a time, leading to faster communications. Along with the system of data relays in the Saturn system, including one satellite in polar orbit around Saturn and another in a highly inclined orbit around Titan so that it always had a direct line of sight with Maui, this series of relays kept the people of Maui in near constant contact with Earth if necessary. The only problem, of course, was the hour and a half it took light to travel from Earth to Saturn, but this was an issue that could not be fixed according to the laws of physics.

E. Airlock Procedures (Braving the Elements)

At this point, going outside of the module into the vacuum of space was a common activity. The inside of the ring of modules provided centripetal force to keep a person from flying off of the colony, so people could walk around outside to get some fresh vacuum. There were no longer strict controls of the airlocks; only a couple of guards checked the licenses of people entering and exiting the module. Obtaining an EVA license required a written test and a practical test, just like obtaining a driver's license on Earth. You had to have been at least 21 years of age or older to get a license, and for the first year you must be accompanied by an "expert" (someone who has had his or her license for over a year). There were two main airlocks, which were located on the "roof" of the interior. People who chose to go on EVAs were given a schedule of dates to choose from, since a person was only allowed to go outside once every 3 months to limit radiation exposure. An elevator system ran up to the airlocks. The Biosuit technology that was developed 40 years previously was still in use and becoming a common article of clothing to own. The suit was more stylish and came in a variety of designs and colors for easy identification.

F. Emergency Procedures

Scenario	Response
Fire	• Fire detectors sense the smoke. • Module is closed off from the rest of Maui to stop fire from spreading. • People in surrounding area locate nearest emergency oxygen masks and move away from the fire and into safe rooms. • Computer systems locate coordinates of fire and activate corresponding foam dispensers to put out the fire.
Air Contamination	• Sensors detect contaminant. • If contamination is localized, hatches shut off the affected module from the rest of the station. • Residents are immediately moved to safe rooms and locate oxygen masks. • Emergency air supply replaces the contaminated air in the modules. • Computers turn on the Sunlamps to activate dormant algae to refill the emergency air supplies. • Algae recycles the air using photosynthesis
Water Contamination	• Backup water loop is brought online • Primary loop is filtered and sterilized
Food Contamination	• Biosensors and human specialists locate the source of the pathogen • Contaminated food is immediately disposed of • Access back up food supplies if necessary • Alert hospital staff
Hull Puncture	• Sensors detect puncture • Hatches shut to close off module • Residents are moved into safe

	rooms with emergency oxygen supplies. • If the puncture is small, the wall repairs itself. • If the tear is large, a team is immediately sent out to patch it • Module is re-pressurized and tested for leaks
Power Failure	• Emergency power supply is brought online • All non-critical systems are shutdown (Essentially a blackout of everything but life support equipment) • Engineers get to work to find source of failure
Equipment Failure	• Backup system is brought online • Components are repaired in the assembly module
Cyber Threat	• If computer system is compromised, a backup system is put online • Antivirus program is written
Disease	• The ill are sent to the hospital and given medical assistance. • If over 220 people are ill, a quarantine is established.
Data Storage Failure	• Backup data cache is accessed
Micrometeorite	• Emergency services deal with immediate problems such as fire, pressure loss, or power failure. • Once the station has been stabilized repairs are made.
Personnel are stranded in the Saturn system away from Maui	• Personnel signal for help and Hoppers conduct a rescue mission • If people on an expedition don't regularly check in with Maui, a rescue mission is immediately launched
Onboard Riot	• City Council law enforcement detains belligerents. • If riot is violent and cannot be detained, module is sealed off and harmless knock out gas is dispersed in the module • Long Range Acoustic Devices

	(LARDs) can be used to deter a mob from damaging life support infrastructure.
Stowaway	• Stowaway is taken into a training facility and taught to do some form of work. • Stowaway is eventually fully integrated into Maui's civilization.
Coronal Mass Ejection	• Coronal Mass Ejections are not as severe due to more advanced shielding. • Citizens are advised to remain in buildings and to avoid going outside. • Hopper missions are cancelled • If a Coronal Mass Ejection is of large enough magnitude, citizens are taken to safe rooms.
Reactor Malfunction	• Reactor is immediately shut down • Emergency fuel cells go online • ISRU plant is programmed to increase hydrogen and methane production to supply the fuel cells while the reactor is being repaired.

1. Safe Rooms

The SDC quickly realized that if Maui was ever to become a self-sufficient station, disaster scenarios that included aborting to Earth were no longer tenable. If Maui was to survive during a crisis, her residents would have to stay behind and solve the problem themselves. To this end, the SDC had safe rooms installed throughout the habitable modules. These were small rooms that could hold 8 to 10 people in an emergency. The rooms were airtight and had their own oxygen supply, allowing them to withstand everything from fire to pressure loss. The safe rooms were spaced so that it was never more than a 20 meter walk from any location on Maui to a shelter. During times of emergency, bright lights would activate to direct people towards the nearest shelter.

II. PHYSICAL STRUCTURE

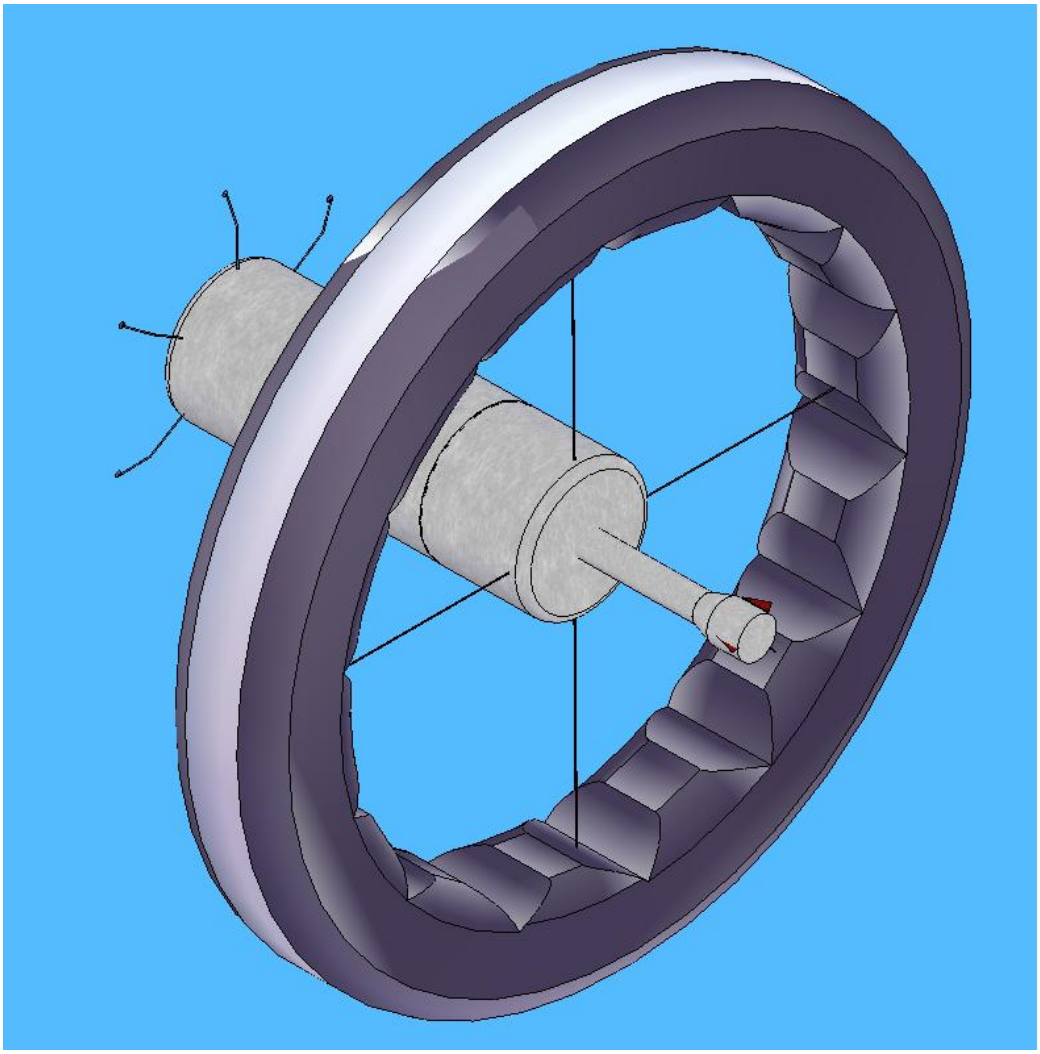

A. Transition

After about fifteen years of operation, the helium-3 mining process in the atmosphere of Saturn began to improve, and, around roughly the same time, helium-3-deuterium fusion was beginning to spread as a power source both on Earth and on various space outposts, as well as the rockets needed to get to those outposts. With this new increase in both supply and demand, Maui began turning a larger profit than it ever had before. Not only did this give it an excessive maintenance budget, but it also attracted many entrepreneurs who wanted to make their own profit from the activities going on in Titan orbit. With the limited room on board Maui, however there was not much room for an internal economy at all. So, with the extra funds from boosted helium sales, the SDC decided to start an expansion project.

In order to attract more investment, the SDC wanted to make Maui as inviting and Earthlike as possible. They started construction on a pair of larger habitat modules around the two that already existed. They used the same materials as the existing modules, but attached them piece-by-piece and sewed the pieces together,

until the modules were complete. Tests were then done to assure that the new larger modules were as structurally sound as their predecessors, and they were subsequently inflated with nitrogen from the atmosphere of Titan to see how they performed under pressure. When these tests were completed, some of the nitrogen was replaced with oxygen and trace amounts of other gases to make it similar to Earth's atmosphere.

The delicate process of lowering the original habitat modules to the bottom of the new ones then begun. This had to be done without damaging anything inside, and it had to sever all attachments between the old modules and the elevator shaft. Residents of Maui were moved to the center of the colony for this transition. Once the old modules were detached, steel cables were used to gently lower them down to the floor. They were then punctured, and their contents were transferred to the more open spaces of the new modules. During this process, the artificial gravity was adjusted for the new living radius. Every resident was given temporary shelter, in the form of a canvas tent, while more permanent buildings were built. When this was completed, there was much more room for both more people and economic activity to develop.

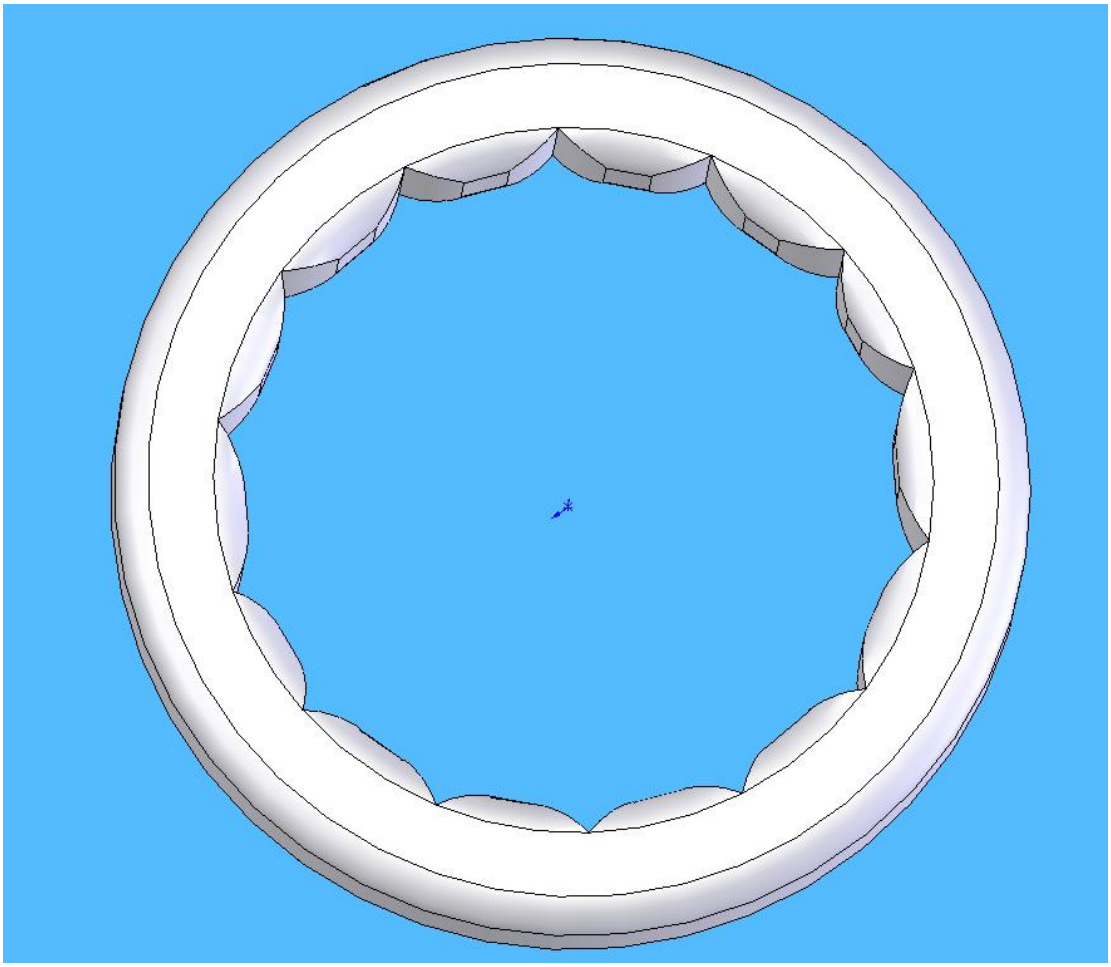

As time went on, however, it became apparent that with its new amenities, thriving economy, and exotic locale, more and more people wanted to move out to Maui to live and do business. Two larger modules were not enough; they needed

more. This time, though, they had nothing to build them around. They decided that the best way to make more modules was to assemble them separately and attach them later. In order to do this, they decided to make an **assembly chamber in the center of the colony**. This would be assembled the same way the two new modules were assembled, but this one would be much larger and would not need to replace any existing structures. Once completed, the new docking system was installed and construction began on additional habitat modules. This was done two at a time in order to preserve the symmetry, and therefore the rotation, of the colony. Once the new modules were completed, they were removed from the assembly chamber via the airlock. The modules were attached to the end of the assembly chamber by steel cables, and slowly allowed to move outward, until they reached the proper distance and were inflated with air. They were then pulled toward the existing modules with more steel cables. Then, the walls were aligned, and the process began of attaching them together. After each module was securely fastened to the adjacent one, steel cables were run from the roof to the central axis in order to keep the new modules in place. Then, the walls between the modules were removed, leaving two longer modules. This process was repeated until the modules formed a complete ring around the central axis of the colony.

B. Modules

The walls of the modules were the **same composition as in phase 1**, but their geometry was quite different. These modules were **200 m** tall in the center, and had floors of roughly **300 m by 200 m**. The whole ring was made of **14 individual modules**. The floors were curved to maintain a constant **700 m radius** from the center of rotation; since everyone now lived roughly on the same level, there was not too much of a change in gravity to worry about. Because of the geometry of forming a wheel shape with individual modules in the way Maui did, the ceilings of the modules were smaller in dimensions than the floors and were bowed out slightly, forming the appearance of a dome shape to an observer on the inside.

The modules were connected by sewing the same kind of material the modules were made of to the outside, layer by layer, to form a wall of the same strength as the modules. This was done where the floors and walls started to curve inward; the result was a continuous structure. This continuous structure was achieved by removing the module walls that had been enclosed by the connections, as they were no longer necessary and the colony leaders believed that everyone could benefit from having a much larger open space rather than several smaller ones connected only by a central axis. Much care went into making the entire ring seem like one single structure. By the time construction was finished on the ring, the only way an observer on the inside could tell where one module ended and another began was by looking at the “domes” that formed the ceilings.

Because these connections were structurally weaker than the surrounding module, steel cables were attached to maintain stability. Steel cables were also attached to the roof of each module in order to maintain the shape of the ring.

C. Assembly Chamber/Large Zero Gravity Chamber

The assembly chamber was built with the original purpose of constructing new modules. It was constructed in much the same way that the first two larger modules were, but it was much larger, being **500 m across and 500 m long**, with a **200 m long** airlock. It was built in the center, around the docking port. Because of this, the chamber put into place a new docking system for the colony. The airlock was made of aluminum, as inflatable modules loose their structural integrity when depressurized. The airlock was assembled in orbit alongside the colony, and was attached to the inflatable chamber when both were completed.

Zero gravity in this chamber was achieved much in the same way as the smaller one from phase 1, but it was much trickier since artificial gravity on the floor of this chamber was more than twice the gravity of the Moon, and slightly more than Mars gravity. This made working on the floors useful and opened up much needed workspace. The platforms that decelerated people remained stationary on the ground until they were ready for use. They then sped up in relation to the colony's rotation or slowed down in relation to a stationary observer in order to exactly match Maui's angular velocity in the opposite direction. The occupant of the platform was then free from the rotation of the colony, and with nothing keeping him or her on the ground, was free to float off into the interior of the chamber. To return to the ground, there were nets that were constantly rotating against the rotation of the colony. One needed only to grab one of them and press a button, and the nets would then slowly accelerate back to the angular velocity of the rest of the colony. This allowed workers who wanted to assemble large objects such as additional modules or to make repairs to rockets to do so without the obstacle of gravity.

Once the new modules were finished, the chamber started to take on a different purpose. It was utilized for scientific research and, in some cases, recreation. It was also used for maintenance on the IPVs that were going along their normal trade routes but needed minor repairs.

D. Docking System

With the original docking port enveloped by the assembly chamber, a new docking port was needed. At the same time, Maui was becoming increasingly popular with both tourists and potential residents, not to mention businesses looking to capitalize on its success. The SDC decided to use this opportunity to increase their colony's docking capacity. While under construction, the original docking port was still useable, but once the airlock was attached onto the end of the assembly chamber, that was no longer the case, so the leaders of the colony had the idea to make the new docking system part of the airlock. The system they devised was to have six arms coming out from the side of the airlock that would constantly be rotating against the rotation of the colony, appearing stationary to any rocket that was trying to dock with them. These arms would have tunnels that would lead to a section of the interior that was also spinning against the rotation of the colony. These tunnels would be comparable to jet ways at an airport. Once inside, there were nets that would accelerate people to Maui's angular velocity in the same way they did in the assembly chamber. The actual docking ports were still the same International Docking System Standard that was used in phase 1.

E. Elevator Shafts

As the construction of the ring went on, Maui's leaders realized that two elevators from the center to the outside were not going to be sufficient, so they decided to add two more. These two, also at a 180° angle to each other ran from the central axis to two of the joints between modules so that they would be perpendicular to the two existing ones, minimizing the distance any one person would have to travel in order to go to the center of the colony.

Phase 2 Dimensions

Object	Dimension	Value
Habitat Modules	Height	200 m
	Floor length	314 m
	Floor width	200 m
	Wall thickness	40 cm
	Volume	1.71×10^7 m^3
	Mass	2.42×10^4 metric tons
Elevator Shafts	Length	500 m
	Diameter	6 m
	Wall thickness	30 m
Assembly Chamber	Length	500 m
	Diameter	500 m
Airlock	Length	200 m
	Diameter	500 m
Docking Arms	Length	125 m
	Diameter	6 m
Laboratory Module	Diameter	100 m
	Length	50 m
Helium-3 Storage Module	Diameter	100 m
	Length	100 m
Additional Storage Module	Diameter	100 m
	Length	100 m
Fusion Reactor Module	Diameter	150 m
	Length	200 m
	Radiator Dimensions	Three 40 m by 20 m right triangles
Colony As A Whole	Length of central axis	950 m

	Diameter	1400 m
	Mass	2.05×10^6 metric tons
	Moment of inertia	6.67×10^{11} kg·m^2
	Volume	3.79×10^8 m^3

III. COMMUNITY DESIGN

A. Habitat Module Design

Phase II saw a great boom in the construction on Maui. **The first buildings in the colony were the old habitation modules from Phase I.** These two buildings, one on either side of the colony, served as the governmental headquarters that ran the colony. The areas immediately around these buildings were the first to undergo construction, and for the greater part of Phase II these were bustling with heavy construction of tall buildings made out of plastics and composites (there was no weather in the colony and therefore no danger of erosion or destruction).

The newly attached modules were immediately occupied by awaiting small families, couples, and single members of the growing society. Whenever a new module was finished, a restricted number of people were able to move in and build their own small houses in laid out plots of land, and the rest could reside in larger apartment building complexes. **Buying property on Maui was just like buying real estate on Earth, with the exception that property was bought by the cubic meter.** These small houses and apartment buildings were also made out of plastics and composites, and the largest house that was able to be constructed has two bedrooms, one bathroom, and a kitchenette, and the residents of the new house could pick the structure of the house prior to the creation of it. The apartment building rooms had interior walls on tracks that allowed the occupants to shift the design to their liking in order to have variety. The cheapest apartments housed one or two people with a single bedroom and bathroom with a small kitchen, the more expensive apartments held a family of four comfortably. **No one could own their own washing machine since they used too much water, so laundromats were located in every module.**

Each module of Maui was designed with different patterns and layouts so that residents could get a greater variation in their daily commutes and activities. The modules varied with some containing either small farms, greenhouses, aquaculture tanks, or animal pens. Two main food markets were located on opposite sides of Maui. There was a large park in one of the modules and a few trees lined the sidewalks to add scenery and make the environment less artificial, but the majority of the work done on the community was dedicated to accompanying the rapidly increasing population. **In case of a fire or other emergency, there were giant doors that could cut off one module from another to contain the disaster.**

1. Lighting

To get the environment to seem less artificial, the ceilings of the modules were painted blue so that Mauans felt like they were outside when moving from one building to another. Large LED lights on the ceiling were clustered to resemble the Sun in each module. These lights had a more advanced brightening and dimming system than in Phase I, and they even turned a reddish orange color for sunrise and sunset. At night, the large LED lights glowed a soft white color to portray the moon, and the modules became much darker than they did in Phase I. There were several streetlights scattered throughout the modules that turned on at night for midnight excursions. The schedule of the public lights was controlled by the Mauan

government, but it was not treated as a utility like water and air. Buildings, apartments, and houses used traditional compact fluorescent lamps.

B. Recreation

To make the community appear inviting to immigrants, the SDC made sure that Maui had ample recreational facilities. Maui had two main centers for recreation, **the Marie Curie Park and Town Center Gym**.

Marie Curie Park was located near one of the primary residential areas. The park included a small stream, a couple of trees, an assortment of flowers, and, in the center, the **Tower Center Gym**. The park was used for several events, ranging from art festivals, to concerts, to outdoor theater. The outdoor theater was a stage built into the back of the Town Center Gym.

To promote health and well being, Maui constructed the Town Center Gym. The Town Center Gym was a two-story building. The first floor layout of the gym was divided into five categories: cardio, weight lifting, upper body, lower body, right entrance; and core equipment. The second floor layout of the gym was a track and a stage. The track was a circular platform that was able to be used for sports, such as track and field or rollerblading. The center stage was able to adapt to variety of sports: tennis, soccer, basketball, etc. An outdoor stage extended from the back of the gym. As mentioned before, this stage was used for concerts, plays, and all manners of public performances. By ensuring a rich workout environment, the inhabitants were ensured to properly exercise and to maintain good health. Both the gym and the park were owned by the Mauan municipal government, but the actual task of operating these facilities was contracted out to private firms.

C. Medicine

As Maui's population grew in size, the colony's healthcare system had to expand as well. In Phase-2 Maui had **two onboard clinics**, located on opposite sides of the habitation wheel from each other. Each clinic included two physicians, one surgeon, three nurses, and two medical administrative assistants. The clinic had a volunteer option to promote efficiency and to train people. The structure of the clinic was divided into two waiting rooms, three check-up offices, one emergency area, one surgical department, and two storage places.

As necessary for any medical establishment, the equipment was sterilized in routine practices. The medication for the colony, unfortunately, was not able to be manufactured on the ship due to limited resources, with drugs having to be shipped in by IPV. **Due to the substantial profits of the helium-3 mining industry, the Mauan government was able to and still does provide free and comprehensive healthcare to all of its citizens.**

For medical situations requiring immediate response, each hospital had one small electric cart that served as an **ambulance**.

D. Mental Health

The increase in Maui's population made it necessary to expand its mental health facilities. Unlike the one lone counselor of Phase I, this time there was a team of three psychiatrists on board of the colony.

The treatment of the potentially psychologically ill individual occurred in the psychological building, near-by one of Maui's hospitals. Programs, such as **community support groups** and **group counseling**, were made feasible due to the size of the population. Pharmaceuticals were brought in by IPV from Earth pretty regularly, making sure that patients got the treatment they needed.

E. Government

1. History

The SDC was always more interested in helium-3 mining than running a city. As parts of Maui began to be sold to private individuals, the SDC was more than happy to allow these individuals to participate in the colony's decision making. Maui's first representative body was the City Council. This was a body of eight people who made decisions on things such as Maui's life support system and structural expansion. Representation on the Council was divided between the SDC and the people of Maui with the number of seats being determined by ownership. Whatever group owned the largest portion of the Maui colony had more seats on the council. This way, the SDC could still promote its own interests as long as it had significant holdings on Maui. Once most of the property on Maui had been bought up, and the SDC had received a payback on its original investment in Maui, the Council consisted exclusively of residents elected by other residents.

In 2076, the United Nations issued the Unincorporated Space Territories Act. The act mandated that any unincorporated space settlement had to declare itself a colony of one of the UN member states, be incorporated into the nearest other space colony, or declare itself a sovereign nation state by 2080. The decision was put to a popular referendum in Maui, **with the residents overwhelmingly voting in favor of declaring Maui a sovereign state.** This was done because the Mauans felt that the helium-3 supply needed to be controlled by the people who mined it.

A constitution was quickly drawn up by the City Council to declare independence and another referendum vote by the people of Maui passed the movement.

2. Structure

Maui's original government was organized around the **City Council**. Council members were popularly elected, with each one representing a different neighborhood. The people also **popularly elected a Mayor** to head the council and serve as a head of state when dealing with other nations. The council would meet once a week to discuss and vote on legislation. These meetings were open to the public and average Mauans were encouraged to come in and speak their minds before the Council. Elections were held every four years and citizens could run for office as many times as they wished.

Unlike many Earth governments, the Mauan City Council had the added task of running a complex spacecraft. One of the first things every newly elected City Council would do would be to hire a **Director of Operations** to manage Maui's technical infrastructure. The Director of Operations was an employee of the City Council and was therefore held responsible to the people of Maui. If the Director

failed to adequately meet the needs of the Mauans, the council would have him or her removed. In some ways, Maui was run like a corporation with the Director of Operations acting as the CEO and the City Council acting as the board of directors.

The operation of Maui's life support systems was entirely contracted out to private firms. This was done because it allowed the City Council to avoid the complication of creating a large bureaucracy to manage the colony's operations. As the governing body of Maui, the City Council still owned the fusion reactor, algae tanks, water treatment plants, and hospitals but just contracted them out to private operators. It was the Director of Operation's responsibility to make sure that the contractors were doing their job sufficiently. If the Director and City Council felt that the contractor was not doing a good enough job, the director would be fired and a new one hired in its place.

The **court system** on Maui started as a single court that held criminal and civil cases. There were no appellate courts, so the ruling was the law. The **law enforcement** in Phase II consisted of seventeen private security contractors and one **Head of Security** to control crime and air locks. A **bill of rights** based off of the UN Declaration of Human Rights, was included in the Mauan Constitution to prevent any police brutality or human rights abuse.

F. Internal Transportation

In Phase II, walking was still a convenient way of getting from place to place within a module, but now with multiple modules a faster internal transport system was required. Bikes became a common way to travel. To get to modules that are farther away, **an overhead single rail monorail system ran throughout the colony**. The single track carried cars travelling in opposite direction, branching at stations to allow them to pass, with there being one station for every two modules. The cars moving in opposite directions ensured that the rotation of the colony was not thrown off. The monorail system, On the Run, was used mostly by the colonists who had business in the urban areas.

G. Networking

Maui's network expanded to allow email communication to Earth. The community was still relatively small, so most communication was dealt with through face-to-face meetings or through cell phones that used a new base station in the middle of the colony for wireless communication. These cell phones were developed for the main purpose of connecting security officers and emergency personnel on either side of Maui, but they were soon available to the public.

H. Population

The population of Maui in Phase II was approximately **1831 people**, but it was rapidly on the rise. Women could now have children with a fully functional hospital, so the population was much more age diverse with babies, children, and teenagers now living on Maui. In order to keep the population in check and prevent it from expanding quicker than the colony itself, economic incentives kept families from having more than two children. The biggest houses and apartments available

held only four people comfortably. Also, diapers and baby food prices were kept artificially high, and the health care cost of having a third child escalated significantly. For these reasons, Mauans mostly stuck to having one or two children.

The deceased on Maui were cremated, and the ashes were fed into the organic recycling system in order to preserve the natural recycling of nutrients in the enclosed environment. Families could choose to have a small funeral service prior to the cremation.

I. Education

Since there were only a handful of teachers onboard, Maui's education system focused on two methods of learning: e-learning and internship programs. For e learning, Maui partnered with Earth-bound universities to promote good-quality education. The e-learning initiative offered a set of basic education courses that offered video lesson, online work, and potent exams.

As for the internship programs, Maui's inhabitants chose a far selection of optimal paths to follow ranging from nuclear physics to sewage management. The individual's program literally put the individual as an apprentice-type worker for the desired career choice. A specific person's program lasted as long as the individual chose to stay in the program. The purpose of the internship program was to promote the passion for a career and to train people to achieve that career.

IV. LIFE SUPPORT

A. Power

To meet the demands of a growing population, the power grid of Maui was expanded to provide the residents with **350 MW** of power, about that of a small city. This was done by installing a larger IEC reactor into the station in 2066. As with Phase I, only about 61% of the fusion reaction could be converted into energy. To supply 350 MW of electrical power, the Phase II power plant actually produced **584 MW**, "burning" **0.143 kg of helium-3/deuterium mixture per day (52.14 kg/year)**.

All of the 584 MW would eventually be lost as waste heat, so Maui had to expand its radiators to prevent overheating. Just like in Phase I, these new radiators used water supplied from Titan as their working fluid and operated at **1600 K**. The radiators consisted of three right triangles attached to the reactor module. Each triangle having base lengths of **40 meters** and **20 meters** for a total two sided area of **2400 square meters**.

B. Gravity

Since the radius at which most people were living was expanded, the artificial gravity needed to be adjusted. This was done by setting Earth gravity at a radius of 700 m:

$$a_c = r\omega^2$$
$$9.8 = 700\omega^2$$
$$.014 = \omega^2$$
$$\omega = (.014)^{1/2} = 0.1183 \text{ rad/s}$$

To maintain this rotation, VASMIR engines were placed at various points along the outside of the ring. These engines needed to operate somewhat continuously because of various objects that were now going against the overall rotation of the colony, mainly the docking system.

During the construction of the interior living spaces, heavy loads were often moved around the habitation ring. If the load was not balanced by a similar mass on the other side of the habitation wheel, the whole station would begin to wobble and literally tear itself apart from the vibrations. In order to prevent this, a large water reservoir was installed in each module. This way, water could be pumped around the wheel to make up for any mass imbalances.

C. Atmosphere

1. Pressure, Volume, and Composition

The air pressure aboard Maui was identical to that of Stage One, 14.7 psi. The total pressurized volume of air on Maui (stage two) was 3.78×10^8 cubic. If the density of air at room temperature at sea level is 1.204 kg/m and the total pressurized volume on Maui was 3.78×10^8 meters cubed, then the total mass of Maui's onboard atmosphere was 4.55112×10^5 metric tons.

2. Air Processing

Once again, algae photosynthesis was the primary method for removing carbon dioxide from the air. It took 0. 6 liters of algae water per person per day to carry out the necessary oxygen regeneration, CO_2 absorption, water regeneration, nutrient removal and organic waste treatment. (*Shelef, Oswald, McGauhey, 1970)*

The algae worked by forming a closed ecological cycle. With a population of 1831 people, **1,098.6 liters** of algae were needed. A reserve supply of extra algae was kept for other oxygen needs, making the total amount actually **1200 liters**. The algae grew within special under LED bulbs that mimicked sunlight. There was a set of these tanks in each module to ensure that the air was purified evenly.

A computer system constantly monitored the CO_2 levels in the air to regulate gas concentration. If the CO_2 level was too high, it activated tanks of dormant algae spores to make additional oxygen. If the level of oxygen threatened to become too much, the system directed workers in the agricultural areas to trim leaves off of plants in order to prevent them from overproducing oxygen. Water vapor was extracted from the air and was added to the drinking supply or used in agriculture. Sensors will shut off the condenser if the air becomes too dry. Other potentially harmful contaminants such as dust, smoke, and metal fuels will be cryogenically filtered out of the air. The cryogenic filter uses helium produced as a byproduct from the Helium three miners to chill air until reaches liquid form.

3. Air Circulation

In the habitat wheel, air constantly moved in the direction of Maui's rotation. This circulation around the modules was created using a series of fans. This was important because fresh air needs to circulate around the cabin to ensure fresh air reached areas of the modules where plant life was not as dense in order to avoid becoming stale. The fans generated a stream of air that felt like natural wind. This was done by using bladeless fan technology. Bladeless fans draw in air using a small turbine and expel it through a tube. The tube is specially shaped so that air is drawn into it from behind as air leaves it from the front. This multiplies the airflow, creating a smooth and even breeze.

D. Water

Daily Water Use Phase II

USE	AMOUNT PER CAPITA	TOTAL	REASON
Drinking	3.7 liters	6774.7 liters	This is the amount necessary for an adult human to remain healthy and hydrated.

Showers	25 liters	45,775 liters	Water being no longer a treasured commodity, showers are no longer arbitrated. This study assumes showerheads that utilize 2.5 gallons a minute at 80psi, a ten-minute shower, and every inhabitant showering once a day.
Faucets	28.5 liters	39,358.5 liters	This study assumes that the average person washes their hands 10 times a day, for fifteen seconds with a faucet utilizing 11.4 liters per minute.
Clothes Washing	2.7 liters	4,943.7 liters	A regular front-loading washing machine uses 10 liter per day. This study assumes that on any given day, only 500 of the passengers are doing laundry.
Dish Washing	0 liters	0 liters	New types of dishwashers currently in development use high-energy UV and pressurized CO_2 to sanitize dishes, not unlike hospital sterilization equipment.
Toilets	20 liters	27,620 liters	The most efficient toilets on the market today are produced by the

			company TOTO and use a mere 1.28 gallons, or roughly 5 liters, per flush. This study assumes that the average person flushes 4 times a day.
Aeroponics	1 liter	1,381 liters	Aeroponics drastically cuts down water consumption by up to 98%, thus requiring only one liter per day to grow sufficient amounts of produce per person.
Aquaculture	710 liters	1.3×10^6 liters	

TOTAL DAILY WATER SUPPLY: 1,425,879.9 liters

1. Water Supply

In Phase II, water will be obtained by the ISRU plant on Titan. To make up for increased demand, the ISRU plant has be relocated to a more constant supply of water, a geyser. A hole was drilled into the geyser's "magma" chamber, to tap the water rushing up from Titan's subterranean ocean.

2. Water Treatment

Once on board Maui, the water was evenly distributed throughout the habitation modules and processed in each as in Phase 1: anaerobically digested and passed through a SCWO. All wastewater was likewise purified. As the population became larger and there existed an abundance of accessibility to water, the qualms against drinking and bathing in water that was formerly human waste were placated. Designated SCWOs only processed human waste and stored the byproducts in separate reservoirs that supplied toilets and aeroponics.

The storage and distribution system was identical to that in Phase 1, but for larger reservoirs in the central truss and a more intricate plumbing system that linked all habitation modules. The same manual emergency provisions were in place.

E. Food

Minimum Daily Food Consumption For Phase II

Food Group	Amount Per Capita	Total Amount
Fruit	0.36-0.37 kg	659.2-677.5 kg
Vegetables	0.36-0.71 kg	659.2-1300 kg
Grain	0.14-0.23 kg	256.3-421.1 kg
Protein	0.11-0.17 kg	201.4-311.3 kg
Dairy	0.61-0.73 kg	1117-1337 kg
Oils	0.02-0.03 kg	36.62-54.93 kg
Spices	0.001-0.005 kg	1.831-9.115 kg
Total	1.6-2.25 kg	2932-4111 kg

1. Agriculture

During Phase II, Maui's population was still so small that the City Council thought it would be more efficient if a single entity produced the majority of Maui's food supply. Like almost every other aspect of Maui, the entity chosen was a private firm under license from Maui's City Council. The Council did not give food out for free, residents still had to pay the firm for their groceries. The Council did however make sure that the agriculture firm sold food at reasonable prices and best met the needs of the Mauans.

Since there was not much room at this point, the roofs of some buildings and patches of available floor space around the inside of the colony were utilized to grow various crops. Since space was limited, the variety of crops grown was also somewhat limited. Among the crops grown were wheat, corn, and rice, as well as smaller amounts of tomatoes, lettuce, peas, beans, potatoes, and other commonly eaten food items. To grow the crops, the growing firm used **aeroponics**, a method of growing which does not require soil and requires minimal water usage. Plants were completely exposed to air, and a mist of water and nutrients was sprayed over them. Contrary to conventional wisdom, this did not kill the plants, but in fact allowed them to grow much faster than would be the case with soil and heavy watering, and increased the amount of food produced in any given unit of area. Using this technique, the growing firm was able to efficiently provide food to all residents of Maui.

2. Aquaculture

At this point in Maui's development, raising land animals was still not very feasible, so approximately **60% of each person's protein intake came from seafood.** Over the course of a year, this meant that, for the entire colony, a total of about **94 metric tons** of seafood needed to be produced. Assuming an average

density of 25 kg of fish per cubic meter of water, this meant that approximately **4000 m^3** of water would be needed over the course of a year. However, since the average fish took about four months to mature, only about **1300 m^3** was needed at any given time.

F. Trash

In Phase 2 of Maui's development, there were no longer communal bins within the habitation modules. Much like in suburban communities, households had three personal bins—designated for organic, nonorganic, and metallic waste—which were used to store waste between pick-up days. Twice a week, municipal garbage carts came to collect all garbage and deliver it to a processing plant. All recycling processes were identical to those in Phase 1. As with most civic services on Maui, trash collection was carried out by a private firm contracted out by the City Council.

G. Radiation

As Maui developed, it could afford to do more to ensure the safety and health of its occupants. As Titan was only inside the magnetic field of Saturn 95% of the time, there was a slight radiation problem, so Maui had a radiation shielding system put in place on the outside of its walls to guard against solar radiation. This system consisted of electrostatically charged structures placed on the outside of the colony. The negatively charged structures protected against negatively charged high-velocity plasma, while the positively charged structures protected against metallic ions and atomic nuclei that had been expelled from the sun at nearly the speed of light. When combined with each module's rxf1 plating, Maui could now shield its occupants against even the worse solar storms. (*Tripathi, 2013*)

V. PHASE 2: THE STORY SO FAR

A. Building the Internal Economy

1. End of SDC Monopoly

Towards the end of the 21st century, Maui was becoming more than simply a mining base. As the members of the SDC were striking it rich with helium-3, many a Terran caught Saturn fever and wanted in on the action. Although the SDC was less than pleased with the idea of other groups coming to Saturn to mine helium-3, there was nothing it could do. International law had for over a century declared space resources as **"the common heritage of humanity"** and could belong to no one. Despite this, the SDC attempted to appeal to the International Court of Justice, citing the precedence of asteroid and lunar mining rights. However, in a controversial decision, the ICJ ruled that Saturn was significantly more important to the heritage of mankind than an asteroid and that the SDC would just have to get used to its new neighbors, **the Free Miners**.

2. Competitors and Isolationism

At first, the SDC wanted nothing to do with the new independent miners. Claiming that Maui was company property, the SDC banned the independents from using Maui's facilities. As a result, the independents banded together and started a colony of their own, **Archangel**. Archangel was much less concerned about maintaining control of the market than Maui and thus was more open to third party investment. This caused Maui and the SDC to miss out on an influx of capital into the Saturn system. Compared to the combined resources of the Free Miners, the SDC just couldn't keep up. In addition, the increase in mining activity caused the price of helium-3 to plummet. By the end of the 2060s Maui's entire operation was faced with insolvency.

3. The Mauan Miracle

The SDC quickly realized that its own isolationist policies were to blame for Maui's current condition. In April of 2073, the SDC announced a complete about face in how it ran Maui. Instead of keeping Maui as its own private mining base, the SDC would open up the station to outside investment and settlement. A massive series of expansions were enacted, enlarging the two original habitation modules into a single wheel that could fit over 1000 people and their associated businesses. The SDC then intended to sell space within Maui to developers, with the eventual goal of selling off the entire station. The SDC was eager to get rid of Maui because it felt that it could increase its profits by focusing only on helium-3 extraction. It still planned to pay to use Maui's facilities in the future, but no longer wanted to have the burden of operating the station.

To oversee the transition from SDC property to unincorporated space settlement, the SDC created the **City Council** the quasi-governmental, quasi-democratic, sovereign authority of Maui. Seats on the council were divided between two groups, the SDC and the various independent suppliers, shop owners, Free Miners, manufacturers, and their families that now called Maui home. The more of

Maui one side owned, the more seats it had on the Council. This way, the SDC could still hold influence over Maui's development and continue its own program of making Maui appealing to business. In 2075, the last major SDC holding in Maui was sold off, and all seats on the City Council now represented the people who called Maui home.

By 2076, the SDC's original plan had worked. The Mauan economy had diversified far beyond helium-3 mining and adventure tours to include manufacturing, light retail, and the beginnings of an entertainment industry. Maui was the most prosperous colony in the entire Saturnian system. Terran economists referred to its change in fortunes as **"the Mauan Miracle".**

B. The Republic of Maui

The issuing of the **UN Unincorporated Space Territories Act of 2076** presented new opportunities for Maui. It mandated that any unincorporated space settlement had to declare itself a colony of one of the UN member states, be incorporated into the nearest other space colony (Archangel), or declare itself a sovereign nation state by 2080. The decision was put to a popular referendum in Maui, **with the residents overwhelmingly voting in favor of declaring Maui a sovereign state.** This was done because due to the Mauan Miracle, the majority of the solar system's helium-3 operations were based out of Maui. The people of Maui felt that only those whose livelihoods depended on the success of the industry should be its major players.

A constitution was quickly drawn up by the City Council to declare independence and another referendum vote by the people of Maui passed the movement.

An Account of the War of Saturn Unification

"I'm afraid if we don't increase our output significantly, we're just not going to be able to compete."

Adcott Baxter knew exactly what those words meant. Insolvency. He despised the very thought of it. He knew the business of helium-3 mining in the Saturn system was cutthroat, but he didn't understand how the UN would just sit by and let one group monopolize the market. Surely all of the righteous, western-minded consumer advocates back on Earth wouldn't stand for it! But where were the antitrust laws? Sadly, Adcott knew the answer to this, too. Large, multinational organizations had almost no influence outside the orbit of the Moon, and any decrees they passed would almost certainly not be executed out in the far reaches of the solar system, assuming they bothered to pay any attention to space whatsoever.

If the colony wasn't going to be able to run a profit, Adcott thought to himself, the whole operation might be shut down. All of his life's work, his home, gone. He would be sent back to Earth and start over. Sure, there were many opportunities for an aerospace engineer in a society that had just begun colonizing the solar system, but none of them were anything like this. He was actually working in space, full time. He wasn't about to let some monopolizing thugs rob him of everything he had worked so hard for his entire life.

"Are you listening, Baxter?" The Director's words snapped him back to reality.

"Yes, sir," Adcott replied.

"Well I'm just letting you know how things are looking right now. If the situation doesn't improve, we might have to cut back on our operations," the Director said, confirming Adcott's fears.

"I understand, sir," Adcott said.

"Then that will be all," said the Director, dismissing him. As Adcott left the office, he was absorbed with thoughts of what was coming. He couldn't allow it to come to that. He had worked too hard for that. His pace began to pick up. His palms started to sweat. He had thought of a plan to save the entire colony from financial destruction. And a cunning plan it was.

He briskly walked to the tracking room, and before entering, quickly checked around to see if anyone was there. Seeing no one, he quickly went inside and locked the door. As he had expected, there was nobody inside. He went to one of the computers and, before too long, found exactly what he was looking for. A relatively small meteoroid had worried some of the colony's leaders, as its orbit was uncomfortably close to the orbit of the colony. The scientists on board insisted it wasn't going to be a problem, but they kept track of it just in case. Now Adcott had found all of the data on its trajectory, plus the trajectory of a certain other object.

Patiently, he waited until the "daytime" shift was over, as if day had any meaning in space. He then made his way to the small spacecraft hangar, where the robots that were used to perform repairs to the outside of the colony were stored. Not all of them were unmanned though, and not all of them had such a limited range. He

boarded the one that he had personally used for some of the tougher repairs. He was going to need it for what he was planning to do.

As he exited the airlock, he looked at the stars on the screen in front of him. They were only an image, as there were no windows on his craft, but they were still mesmerizing. They reminded him of why he loved space so much, of how big the universe really was, and why he was doing what he currently was.

Once he was clear of the colony he called home, he fired up the thrusters. His target: the small meteoroid that had caused so much angst. With fusion technology at his disposal, it was only a few minutes before he came upon the small chunk of rock that had been causing so many problems. It was no more than the size of a watermelon, but for a space colony moving at thousands of meters per second, that was a big problem.

Once he got close to it, he slowed down and matched its velocity, so that he was only going a fraction of a meter per second faster than it. Precision was necessary for this maneuver. He opened the cargo bay door and, ever so slightly, let the meteoroid slip inside. Once it was in, he closed the door again and activated a magnetic field inside the cargo bay so that the meteoroid would not cause any damage by being thrown about during acceleration. With this task completed, Adcott moved on to his next target.

This one was a bit farther away, and it took about an hour to reach it, since it was currently in a Hohmann transfer orbit from Saturn. The hour was one of the slowest Adcott had ever experienced. He was burning in anticipation. Once he had accomplished his mission, he would be welcomed back as a hero! After all, it wasn't just himself he was doing this for. This was for the greater good, for everyone.

These thoughts were drifting through Adcott's head when he came within range of his target. Finally! He could see its heat signature on the infrared camera. It was a burning ball of white with a rainbow tail behind it, surrounded by a sea of cold blue: the Hopper. Sure Adcott's colony had hoppers of its own, but this one belonged to the monopolizing scum who were threatening to send him back to Earth. They deserved what was coming to them. Who did they think they were anyway? ***What kind of a name was Maui?***

"We'll see what kind of a paradise they are when I'm through with them", Adcott thought to himself.

He turned up the thrusters. Alarm bells began ringing, telling him that he was on a collision course. He knew this very well, though; it was all part of his plan. After reaching a sufficient velocity for impact, he cut the thrusters. He then opened the cargo bay door. Slowly, the small chunk of rock and metal drifted out. Adcott watched on his screen as it started to move away. He then turned his small craft 180°, and fired the thrusters again. The alarms died down and no longer warned him about an imminent collision. A collision, however, was imminent, but Adcott Baxter knew this, and did not look back.

Jebediah Mason awoke with a start. Something was happening, but he was not sure what. He turned his head to see a strange light. After taking a few minutes

to think about his predicament, he realized that the light was coming from his phone, and what had woken him up was the noise coming from it. Jebediah hated being woken up. He answered the phone.

"What?" he mumbled.

A voice on the other end of the line told him something he couldn't believe. He was out of his front door within minutes. The lights had been dimmed to mimic night, and there was construction going on for the third ring of the colony, so Jebediah's preferred method of transportation was his feet. He ran as fast as he could to security headquarters; it wasn't very far from his house, as he was Head of Security for Maui. He couldn't stop thinking about what he had heard on the phone. One of the hoppers full of helium-3 destroyed…

He burst into the security headquarters. "Tell me everything you know!" he shouted at no one in particular.

"About half an hour ago we lost contact with one of the hoppers," one of the analysts in the room said. "We didn't know what had happened, so we looked at infrared footage of where it was supposed to be and it was just…gone."

"It just disappeared? Just like that?" Jebediah asked.

"Well we did find one small rocket moving away from where the hopper was supposed to be. We think that might have something to do with it," the analyst responded.

"So you're saying this small rocket destroyed our hopper?" Jebediah asked.

"Right now, that's the only explanation we have. We have no idea how it did it," the analyst replied.

"Where did it come from?"Jebediah asked demandingly.

"We're not sure, but it appears to be heading in the general direction of Enceladus," the analyst told him.

"You think it could have come from Archangel?" Jebediah asked. Archangel was the name of the helium-mining colony orbiting Enceladus, intended to be competition for Maui even though at the moment it could barely support itself financially.

"I have no idea why they would do anything like this, but it seems to be the only possibility at this point," the analyst said.

"I want to talk to whoever's in charge of that colony. Don't stop trying until they pick up." Jebediah walked out of the room. He paced around outside trying to make sense of what had happened. Something like this was unprecedented. There had never been an act of aggression in space before. He couldn't comprehend why there had just been one. After a few minutes, he went back inside.

"Nobody's responding to our calls, sir," a voice said from inside.

"Keep trying," Jebediah snapped back. "They've got to answer eventually."

Adcott Baxter was still enjoying the adrenaline rush of what he had just done. He wasn't going to have to leave now. He had saved Archangel from bankruptcy. As he pulled back into the hangar, he couldn't have felt more proud of himself. It was only when he stepped out of the vessel, however that he realized that people might have noticed he left. This realization only came to him because people did notice he

left, and they were not happy about it. What seemed like the entire colony security force was there, and they did not seem as happy as he was that he had taken a rocket without permission.

Adcott was escorted down to his quarters, and two security personnel were left there, essentially leaving him under house arrest. This was how he was being thanked for his heroism! He figured that maybe these security guards had not heard the story behind his actions, so he told them. He told them how the helium-3 mining firms preferred Maui, leaving Archangel to waste away. He told them how he valiantly fought back against the thugs on Maui and asserted Archangel's dominance. And above all else, he was convincing. Before two long, his two captors became his two allies.

"The Director says you're not allowed to leave your quarters," one of the guards told Adcott. "That comes directly from him. Apparently he isn't as impressed by what you did."

"I think we might have to face the fact that the Director was in on this. He made some kind of deal with Maui to get rid of their biggest competition, probably in exchange for a lot of money," Adcott told him.

"I…I can't believe that," the guard said.

"It's the only explanation for why he was allowing this to happen," Adcott said. "He had to have been planning this for a long time.

Adcott knew he couldn't do anything when he was supposed to be confined to his quarters, but he now had two followers who believed every word he said. He directed them to go tell people what he had told them, and to bring them back to his quarters. He had not anticipated anyone not agreeing with what he had done, but that problem would soon be remedied.

After two hours had passed, the two guards returned with eleven people who they had recruited to their cause. It was not optimal, but Adcott was determined to stay on this colony, and being imprisoned was not his intention. In his time alone, he had thought up a plan, and he told his new team of thirteen people exactly what is was and how they were going to execute it. They absorbed every word of it, and by the end, they were all convinced of its importance and were committed to making it happen. Adcott Baxter was pleased.

After an entire hour of trying, Jebediah Mason was finally able to get someone from Archangel on the line.

"This Michael Westmore, Director of Operations on Archangel. I'm sorry it took so long; we had a bit of a situation. How can I help you?"

"Well, sir, we've had a bit of a situation of our own. It turns out one of our hoppers was attacked by a small spacecraft en route from Saturn. We have reason to believe this spacecraft came from your colony," Jebediah told Director Westmore.

"My God!" the Director exclaimed.

"Do you know anything about this?" Jebediah asked him.

"One of our engineers just took a small rocket from the hangar without authorization! I had no idea he had done anything like that with it!" the Director said, clearly shocked.

"So you know who did this?" Jebediah asked.

"Yes, his name is—" There was a strange noise on the other end. The Director had suddenly stopped talking.

"Director Westmore, are you still there?" Jebediah asked, confused.

"What are you—" Jebediah heard on the other end of the line. It was quite obvious now that there was a struggle going on. Jebediah's instinct was to help, but he knew he was helpless. All he could do was listen. That's when the realization came to him that this was connected to the attack on the hopper. It didn't stop there, there was something bigger afoot.

"What's happening there?" Jebediah shouted. The raucous continued. After a few minutes, it died down, and a voice appeared on the other end of the line.

"Hello," it said.

"Who is this?" Jebediah inquired of the voice.

"Who I am doesn't matter. All you need to know is that your reign of terror is over," the voice replied.

"Reign of terror? What are you talking about?" Jebediah asked.

For a few seconds, there was silence. Then the voice said, "Tell the firms occupying Maui to stop their helium-3 mining and we won't have any problems." The line went dead.

"What was that all about?" one of the analysts asked.

"I don't know," Jebediah replied, "but I intend to find out. Wake everyone up."

"Everyone, sir?" the analyst asked.

"Yes, everyone!" Jebediah snapped back. "We're going to need them. Tell them to report to the hangar bay." The hangar bay was a section in the assembly chamber of Maui that was used to store the robots and one- and two-man spacecraft. This was a day Jebediah Mason had hoped would never come, and had fully expected would never come. He sprinted down the street until he got to the elevator that took him to the monorail. He had always complained that the security building was too far from the main elevator.

Once he got to the elevator, he took it up to the center of the colony, and then went to the assembly chamber. There he found every small craft owned by the colony. These small spacecraft were intended to be used for repairs to the colony, for repairs to the various parts of the helium mining process, maybe even for correspondence between Maui and the other colonies in the Saturn system, but this was never their intended use. An event like this had never occurred before, but there was always the chance of it happening, so every small rocket had the capability of being outfitted with military-type weaponry if the need ever arose. This was no ordinary military equipment, either. This was specifically designed for the theater of space. This was not the flashy photon torpedoes or ray guns seen in science fiction, but real space weaponry: cannons. In space, there was no such thing as minor damage; you either left your opponent completely intact, or completely destroyed. A small lead ball, about eight inches in diameter, given enough velocity, could spell death for hundreds of people.

The small spacecraft in the hangar bay could be outfitted with these weapons, as well as small forward, aft, and side thrusters for added maneuverability, in a

matter of minutes, and as the freshly awoken security personnel began pouring in, having just been made aware of the situation, the process began to move along very quickly. When most of the work was done, Jebediah began assigning people to rockets. They had all trained to do this, but the training was done very casually, as nobody could even imagine a scenario in which a military strike was needed in orbit.

It took a while for every rocket to clear the airlock, but once they were all outside, Jebediah entered the orbital path to Enceladus into the computer and sent it to everyone else. They were helped by a small gravitational assist by Rhea, but that was the only nice thing about the situation. As soon as everyone was ready, they began to go.

"Mr. Baxter, a whole bunch of rockets were just launched from Maui!" One of the recruited members of Adcott's team exclaimed, piercing the silence that had previously enveloped the room. He had just burst into the former Director's office from what Adcott could only assume was the tracking room.

"What?" Adcott shouted in disbelief. "Are they coming here? How long do we have?"

"At the speed they're going, it looks like they'll be here in about two hours," the clearly frightened man said.

"Go back and keep an eye on them," Adcott instructed him. "Keep me updated on their progress. I have an idea of what to do about them." The man left. Adcott had not expected anything like this. He thought mutiny against the Director was the most objectionable thing he was going to have to do that day. But he still had a couple of tricks up his sleeve, and he now had assistants to help him perform his magic.

Jebediah Mason and his fleet of rockets were in the process of their final burn to enter orbit around Enceladus at precisely the same point as Archangel. He wasn't sure what to expect when he got there. He had a rough plan that he had articulated to his team, but depending on the situation at Archangel, it might not work.

When they finally got within visual range of Archangel, a feeling of dread spread throughout him. He saw five unmanned repair robots in a formation in front of the colony. As soon as they got close, the robots accelerated rapidly at the fleet of rockets. Most were able to use their new thrusters to avoid the charges, but one of the rockets was hit and was sent hurtling into space. This was war.

Jebediah ordered his men not to attack the robots; they were far away now and were in a new orbit. They only had one shot of causing any damage and whoever had led that charge knew it. Using repair robots as weapons had been a clever move, but they were never designed to change direction at high velocities, so there was almost no chance for a second attack by them.

As soon as they were clear of the robots, Jebediah gave the order to surround Archangel. If all else failed, this was his checkmate. Archangel was still two modules spinning around a central axis. One forceful hit to the central truss of the colony, and it would start spinning out of control. Artificial gravity on the inside

would be affected; it would likely increase, leaving everyone trapped inside heavier than they had ever been before. It would be nearly impossible to correct the rotation after a hit like that. Not to mention the damage to the truss itself. The damage could possibly be so bad that it would break in two, and the pieces would go spinning off away in different directions, although this was an unlikely worst-case scenario. Nevertheless, there was great damage that could be done with a single cannonball, and Jebediah intended to use this fact as leverage.

The one drawback in this plan was that if anyone actually did end up firing on the colony, there was a slight glitch in the rockets' programming called the Law of Conservation of Momentum that would cause whoever had fired to go flying in the opposite direction of the target. In these extreme circumstances, this was a risk Jebediah was willing to take.

Just then, in the corner of his screen, Jebediah noticed four or five other rockets that were not part of his team appear out of nowhere. Before he had time to react, they had positioned themselves around members of his team. He then heard static on the radio.

"That was very clever of you to surround our humble little colony, but I'm afraid we won't be outdone that easily," he heard a voice say. It was the same voice he had heard in security headquarters after Archangel's Director of Operations had been attacked.

"One wrong move and your humble little colony will be full of humble little holes!" Jebediah shouted back.

"Your threats are cute," the voice replied back. "But you have to know what will happen to anyone who dares to fire on that space colony. They simply can't be allowed to remain intact."

"There are more of us than you. We can take all of you out with minimal casualties," Jebediah said. He was starting to get a feeling that he was being outmaneuvered, even though he knew he wasn't.

"Yes, but you seem like a good boy, you want to do this without casualties. Besides, we have you surrounded; if you fire on us, you'll go flying into the colony, and nobody wants that."

"…Who are you?" Jebediah asked.

"Let's just say I've taken over for Director Westmore," the voice replied.

With that, Jebediah knew he had accomplished what he wanted to. Whoever he was talking to obviously had a big ego and thought of himself as clever. And with his last comment, Jebediah had just willingly allowed this person to believe he had outsmarted him. The side effects of such a person believing he had claimed victory generally included carelessness and complacency, and this is what Jebediah was counting on. Using the time he had just bought himself, Jebediah began putting his plan B into action. He couldn't communicate with his team verbally as this maniac was still listening, so he proceeded to type out his instructions. While he did this, he continued to distract his unseen opponent.

"Well, Mr. Westmore's successor, you have to have a name, don't you?" Jebediah said, trying to pass the time.

"My name is not important, but if you must know, it is Adcott Baxter"

"What led you to do this, Adcott Baxter?" asked Jebediah. There was a silence.

"You're stalling," Adcott said after a few moments. It was true that he had been stalling, but none of that mattered anymore. During their conversation, Jebediah had sent out his instructions to his team, and slowly, in the background, they were being carried out. Several members of Jebediah's team had been drifting toward the enemy rockets, and now they had gotten very close. The plan was working perfectly.

"Really, am I?" Jebediah said almost mockingly. "NOW!" he shouted.

Then, all at once, the members of Jebediah's team that had snuck up on the other rockets all hit a switch inside their command pod. That switch was connected to a particularly strong electromagnet. When this electromagnet was activated, it created a particularly strong magnetic field that attracted Archangel's rockets to Maui's. As soon as this happened, all of the rockets that were now keeping another rocket hostage turned their thrusters on maximum and blasted away. The gang of outlaws led by Adcott Baxter was helpless to do anything about their predicament. They were now on their way back to Maui to be incarcerated for their actions. This left Jebediah and the remaining members of his team to board Archangel and assess the situation in there.

Once inside, Jebediah found two people who had clearly been recruited by Adcott Baxter guarding the hangar. Being skilled in hand-to-hand combat, a skill that these two were lacking, Jebediah had no trouble clearing these obstacles. Once he got to the interior of the colony, however, it became apparent that the great majority of people were not even aware anything had happened. It was the equivalent to the early morning hours on Earth, and most people had slept through the entire incident; those who were aware of what happened tended to be the ones who were somehow involved. Jebediah found the head of security on Archangel, and with both security teams together, they fanned out and looked for Director Westmore. They found him unconscious in a closet in his office. They brought him to the colony medic, but he was not equipped for that kind of treatment, so he was transported back to Maui. With Adcott Baxter locked up and Director Westmore recuperating, Jebediah's ordeal was finally over.

Edna Partridge sat anxiously at her desk. Her office was circular, and on the top of the walls, near the ceiling, was a live 360° panoramic view of Maui's surroundings. Titan was large and looming, and in the other direction, off in the distance, Saturn hung majestically with the expanse of the cosmos in the background. Looking at this scene always calmed Edna, and now was a time when she needed to remain calm. The event that was about to transpire was unprecedented in human history. One of the dots on her panorama began to grow bigger, until she could see the small rocket that she was expecting approach the colony. A knock came at the door.

"Madame Director?" a voice called.

"Come in," she said. In walked Jebediah Mason. She had asked him to assist with negotiations because of his role in the incident. She also believed he had a role to play in what came ahead, although she did not express this to him at the time.

"Everyone is arriving now, and should be here shortly," Jebediah said. The two talked for a short while and then there was another knock at the door. Edna gave permission to enter and in walked Director Westmore from Archangel. He still had a bandage on his head, and his arm was in a sling, but he had returned to his full duties as Director of Operations. With him were the leaders of the new mining colony in orbit around Iapetus and the scientific research outpost orbiting Rhea.

The four leaders were there to discuss possible ways to prevent an incident like the one that had just occurred. They talked for a long while, and they all agreed that it was in their best interest to cooperate in the future rather than just compete directly against each other. Out of this mutual agreement came the beginnings of what they called the Saturnian Federation. Each colony in the Saturn system would continue to operate as its own independent entity, but they would now have a common central government seated on Maui, as it was the largest and most developed colony in orbit around Saturn. This new confederation would act as its own country, and as leader of the lead colony, Edna had just been promoted to acting President. It was decided that the four leaders would have several more meetings in the future to draft a Constitution, which would be sent to a referendum to be approved by everyone living in the Saturn system. Once their meeting had concluded, Edna dismissed the three other leaders and then turned to Jebediah.

"What do you think?" she asked him.

"I think the four of you did a good thing there," Jebediah said. He hadn't really participated much in the discussion.

"If we're going to be a legitimate country, we're going to need representation on Earth, someone who can make our case for us. How would you like to be this person?" Edna asked him.

"Like an ambassador?" Jebediah asked, clearly humbled by the thought.

"Yes, like an ambassador," Edna replied. "You handled that situation with that Baxter character very well. I think we need someone like you representing us back on Earth."

"I...I'd be honored," Jebediah replied. As he walked out of her office, he reflected on what he had gone through, and where it had taken him, as well as the rest of the people in the Saturn system. He thought about the future, and what it held in store, and he knew he was ready for whatever it brought.

Phase 3 (2129-2147)

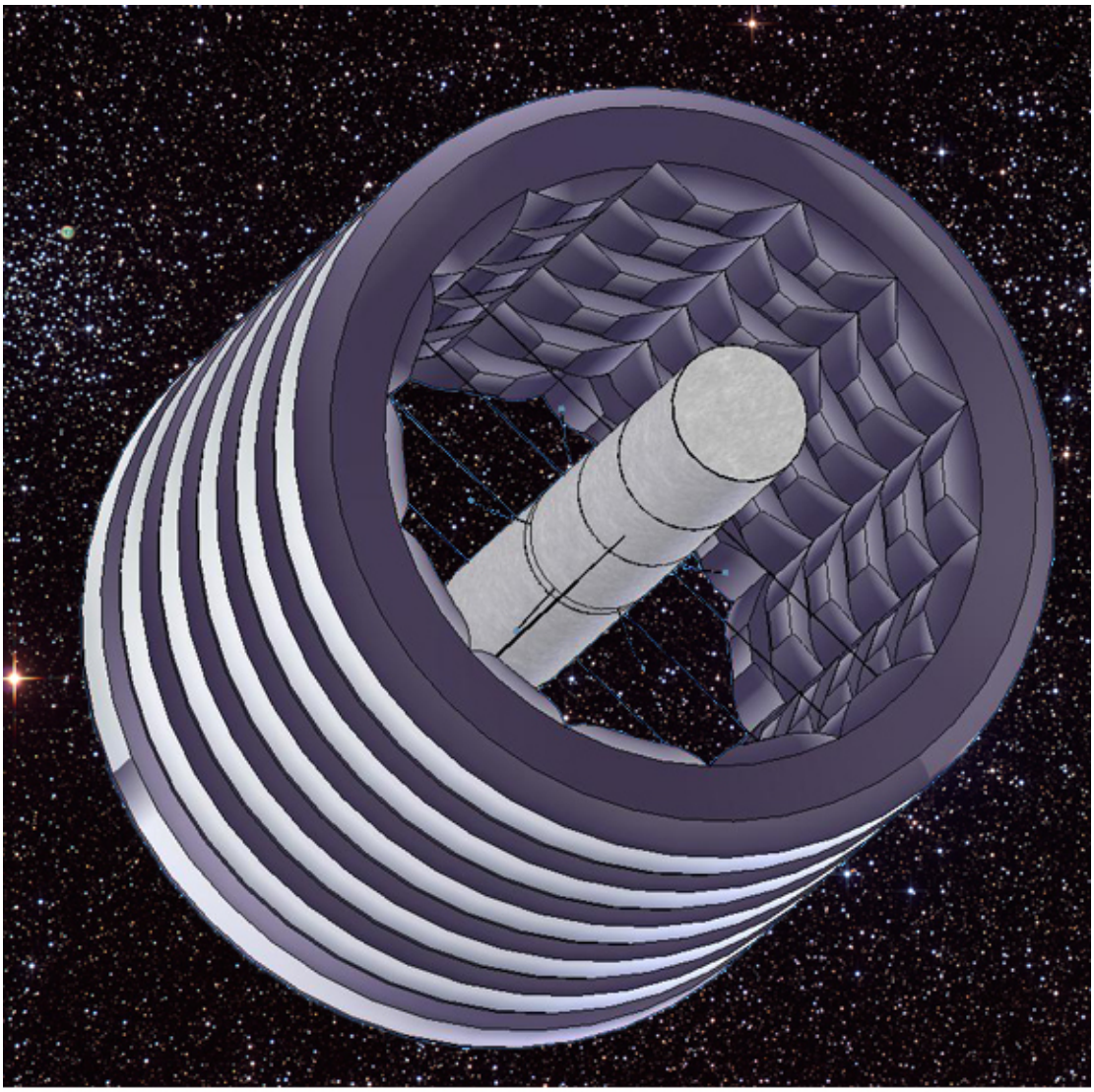

I. OPERATIONS

A. Titan Operations

1. The Deep Ocean Borehole

At this point in the development of Maui, the decision was made to try and tap Titan's subterranean ocean. This decided part out of scientific curiosity and part out of the fact that the ocean represented a virtually inexhaustible water supply. After surveying many sites with ground penetrating radar, cryo-geologists began to bore through the ice. Like in Phase II, they didn't so much drill as they melted their way down. Scientists were very concerned that any foreign material could contaminate any life forms that live in the ocean, so all the methane ice being melted away was pumped up back to the surface. The drill was also sterilized daily with hydrogen peroxide. Once the ocean was reached, engineers lowered the parts needed to assemble a processing plant beneath the ice. All water due to supply Maui was processed and purified on this underwater facility and then sent to the station. In this manner, the massive amounts of incoming water did not have to go through the process of purification, and the SCWOs on board Maui only had to be utilized to purify the wastewater of the colony's inhabitants. Further, from the processing plant a research submarine was launched, designed with the purpose of scientific exploration. This vehicle continues to search for any life forms possibly inhabiting the vast oceans.

2. Titan Exports

In Phase III, exports from Titan became the second largest contributor to the Saturn Federation's GDP after helium-3 mining. Volatiles and plastics continued to be valuable, being sold to other space colonies for life support and building materials, but it was **water** that was the most valued commodity. This was because water was the **reaction mass of choice** for almost every fusion-powered spacecraft in the solar system. Only the Earth had water reserves comparable to Titan's, but Titan's lower gravity well made it the natural leader in the market.

B. Saturn Operations

By the early 22nd century, helium-3/deuterium fusion was the dominant form of energy in the solar system, accounting for 75%. This was because fusion was one of the few energy sources that could be scaled up to provide the **150 terawatts** humanity now consumed. Even fusion's closest competitor, **space based solar power**, was limited by the size of the solar arrays that could be realistically built, and supplying hundreds of terawatts was going to take thousands of square kilometers. Fusion reactors on the other hand, could be built small, small enough to fit in a spaceship, and still provide gigawatts of power. To supply humanity with the terawatts it needed, the Saturnian Federation's annual helium-3 output measured around **17,000 metric tons**. This required the flights of some 1100 Lifter Vehicles each year, making room for a large amount of operators to find a niche in the market.

C. Space Transportation

1. IPV Limits

In the early 22nd century, IPV technology was beginning to reach its practical limits. This had to do with the **mass ratio**, the ratio of a rocket's propellant to its payload. Even though fusion fuel was highly energetic, fusion alone did not create enough mass for an effective rocket system. Both the DFP and ARC designs had to expel **reaction mass** along with the fusion products in order to produce enough thrust to carry out the mission. Since a rocket's acceleration and hence the time it takes to arrive at its destination is determined by thrust, the faster a rocket must go, the more reaction mass it must carry. As the interplanetary market required ever faster IPVs, things got to the point that fusion powered vehicles began to have mass ratios resembling those of outdated chemical rockets, completely negating the advantage of fusion propulsion in the first place.

What really made matters worse was that mass ratio does not scale linearly with a rocket's final velocity, but **logarithmically**. This is because additional propellant must be used to push the mass of the propellant sitting in the fuel tanks. This is why early chemical rockets had mass ratios of around 9 parts fuel to 1 part payload; most of the fuel was being used to move other fuel.

This relationship ultimately limited the maximum acceleration of an IPV to around 0.25 g. In previous eras, such an acceleration would have been seen as a miracle, allowing spacecraft to reach any part of the inner solar system within a few weeks. However Saturn was so far away, that taking a trip to Maui in the 2110s as like taking a trip to America on a sailing ship during the 1700s, a round trip was going to take the better part of a year. As the inner solar system's economy began to develop, this long flight time became a disadvantage. Firms based on the Earth, Mars, and the Near Earth Asteroids were reluctant to engage in serious business outside of helium-3 mining because logistics were a nightmare.

If Maui was ever to develop past helium-3 based economy, a faster means of transport was needed. In the 2130s, such a means was created, **the Beamrider**.

2. The Beamrider

The Beamrider was an interplanetary transportation project funded by the Saturnian Federation and the SDC. The Beamrider sought to decrease travel times to Saturn by eliminating the mass ratio problem. Instead of using an onboard supply of reaction mass to produce thrust, the **Beamrider uses an external source of reaction mass.**

The Beamrider spacecraft itself is very simple, consisting of two main components. The first is the payload module, capable of holding passengers, cargo, or a combination of both. The second part is the propulsion system, which is **just a large solenoid.** During flight, a small onboard fusion reactor powers the solenoid, generating a large magnetic field around the spacecraft. Reaction mass in the form of a charged particle beam, collides with this field and imparts its momentum onto the Beamrider, pushing it forward. Since the Beamrider does not need to carry any

reaction mass of its own, it can achieve much higher accelerations and reach much higher velocities than a fusion rocket.

One particle beam emitter would be located at each point of departure and destination. For half of its flight, the Beamrider would accelerate using a particle beam originating from the ship's point of departure. Half way through, the departure beam would be turned off, the Beamrider would be flipped around, and the ship would be hit with a beam from the destination to decelerate. (*Landis, 2001*)

These particle beam emitters acted like "stations" in the Beamrider system. Essentially they were large ARC engines optimized for spewing out as much mass as they could. Since the beam emitters were not spacecraft, they could be built heavy with large tanks full of reaction mass. In fact, the emitter's mass was so large compared to the Beamrider's that the emitter barely moved when firing. However, it did have small plasma thrusters on the end to keep it in place. Since the particle beam was charged, it "locked" onto the Beamrider's magnetic field, forming a circuit between the emitter and the Beamrider. This prevented the beam from spreading. (*Roberson and Winglee, 2011*)

The initial Beamrider system consisted of one emitter at Saturn, one at Earth, and one at the Earth/Sun L_5 point. Since only one Beamrider can ride a beam, the system was a specialty service, carrying high priority cargo and passengers on a bi-weekly basis. After the system demonstrated its reliability, emitters capable of firing multiple beams were built to handle large scale Beamrider traffic. By the middle of the 22nd century, emitters located throughout the solar system created a large scale transportation network. Travel was so easy that many experts claimed that the Beamrider network marked the end of the solar system frontier.

3. Beamrider Specs

Length	80 meters
Width	60 meters
Max Acceleration	2 g
Maximum Payload	2000 metric tons
Particle Beam Composition	hydrogen
Earth-Maui Travel Time	16.58 Days

D. Communications

As Maui continued to expand, so too did the mankind's influence in space. **By this time, there were self-sustaining colonies on and around many of the planets in the solar system, as well as several asteroids and moons.** For this reason, the humans decided to build an **Interplanetary Communications Network**, or ICN, to efficiently establish effective optical communications between astronomical bodies. The ICN consisted of satellites in polar orbits around every colonized planet, a satellite at the L_4 and L_5 point of the Sun and each colonized planet, and a series of satellites in equatorial orbit around the Sun. These satellites would have signal boosting technology that could receive a signal, amplify it, and then send it back out. Often, a direct signal could be sent to Earth from whichever

colony needed to communicate, but since the ICN used strictly optical wavelengths, which have a much smaller range than radio waves, signals were often sent on a path that included multiple satellites to ensure messages could be received without much of a problem. Maui, as it was one of the most developed and self-sufficient colonies in the solar system at the time, was a leader in establishing the ICN. With this new network in place, and with several servers installed on board, Maui was able to have access to the internet for the first time, even though it was not anywhere near Earth. For what seemed like the first time, Maui now had relatively fast, reliable, efficient communication with Earth and other colonies around the solar system. **(Albeit with an almost 2 hour delay.)**

E. Air Lock Procedures (Going Outdoors)

The rules created in Phase II for entering and exiting through the airlocks were still in place for Phase III, but with the addition of several rings and the expanded population, walking in the exterior of the rings was so common that there was almost always people seen gazing out at Saturn, Titan, and stars from small telescopes outside of the colony. The age that one could get a license to an EVA had decreased from 21 to 18, and some advanced senior courses at the secondary school took a field trip on an EVA. Much advancement had been made in the Biosuit technology, and some competing manufacturers of spacesuits emerged, each with different styles, brand names, and materials to get the price of the spacesuits as low as possible.

F. Emergency Procedures

Scenario	Response
Fire	• Fire detectors sense the smoke. • Module is closed off from the rest of Maui to stop fire from spreading. • People in surrounding area locate the oxygen masks and move away from the fire and into the safe rooms. • Fire department is called to put the fire out
Air Contamination	• Sensors detect contaminant. • If contamination is localized, hatches shut off the affected module from the rest of Maui. • Residents are immediately moved to safe rooms or into a different module. • An auxiliary air supply replaces the contaminated air in the modules. • Computers turn on the Sunlamps and activate the dormant algae to refill the emergency air supplies. • Algae cleans the air using photosynthesis
Water Contamination	• If source of contamination can be identified, valves close off the contaminated section of water for sterilization. • If contamination is significant, backup water loop is brought online • Primary loop is filtered and sterilized • Water sterilization tests are performed in both scenarios
Food Contamination	• Biosensors and human specialists locate the source of the pathogen • Contaminated food is destroyed • Hospitals are alerted

Hull Puncture	• Sensors detect puncture • Hatches close to seal off module from the rest of Maui • Residents in the module are moved into safe rooms and have access to air masks • If the puncture is small, the wall repairs itself • If the tear is large, the repair contractor sends out a robot to patch the hull • Module is re-pressurized and tested for leaks
Power Failure	• Emergency power supply is accessed. • All non-critical systems are shut down • Power Company is notified immediately and locates the source of the power failure using sensors.
Equipment Failure	• Backup system is brought online. • Components are repaired in the assembly module
Disease	• The ill are sent to the hospital and given medical assistance. • If over 1200 people are ill, a quarantine is established.
Cyber Threat	• If the computer system is compromised, a backup system is put online • Antivirus program is written
Data Storage Failure	• Backup data cache is accessed
Micrometeorite	• Emergency services deal with immediate problems such as fire, pressure loss, or power failure. • Once the station has been stabilized repairs are made.
Personnel are stranded in the Saturn system away from Maui	• Personnel signal for help and Hoppers conduct a rescue mission • If an expedition does not check in with Maui by a certain time, one of the Hoppers conducts a rescue mission.
Onboard Riot	• City Council law enforcement

	detains belligerents. • If riot is violent and cannot be detained, module is sealed off and harmless knock out gas is dispersed into the module • Long Range Acoustic Devices (LARDs) can be used to deter a mob from damaged shipboard infrastructure.
Stowaway	• Stowaway is deported back to country of origin
Coronal Mass Ejection	• Coronal Mass Ejections are not normally an issue due to more advanced shielding. • If Coronal Mass Ejection is severe, citizens are advised to remain in buildings and to avoid going outside. • Hopper missions are cancelled
Reactor Malfunction	• Reactor is immediately shut down and repaired • Emergency fuel cells go online • ISRU plant is programmed to increase hydrogen and methane production to supply the fuel cells while the reactor is being repaired

II. PHYSICAL STRUCTURE

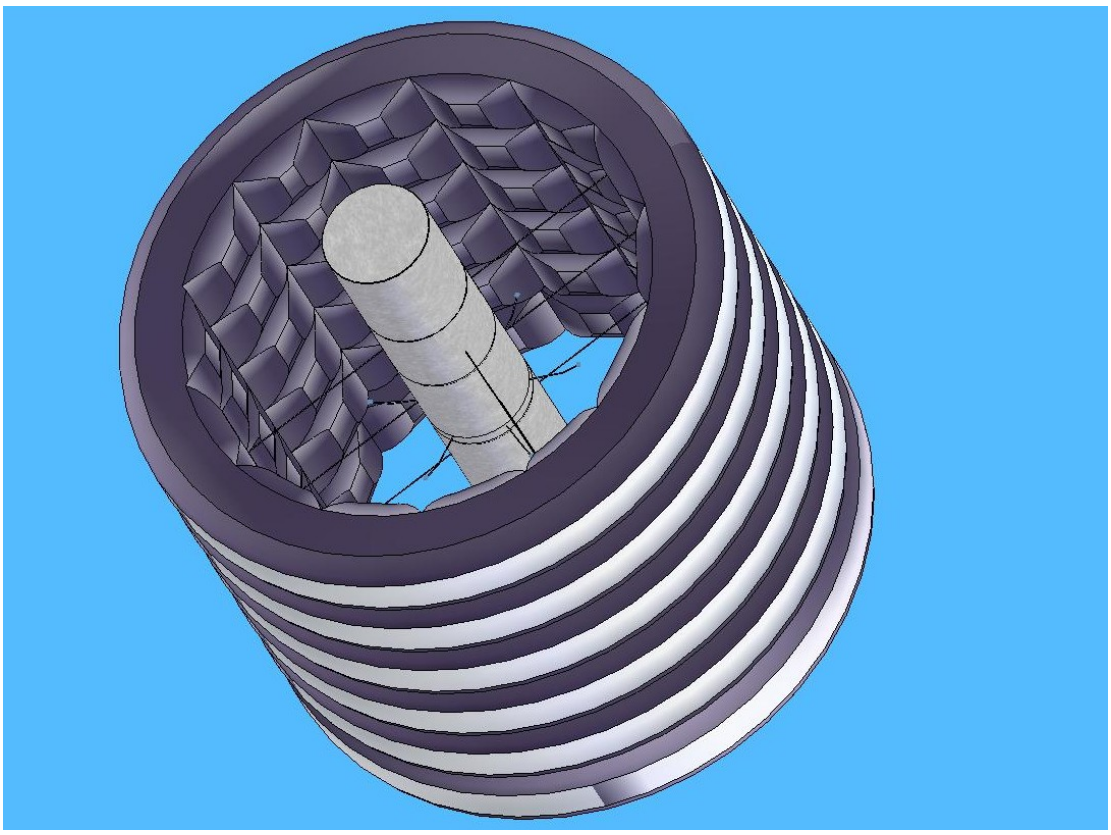

A. Transition

As time went on, Maui continued to thrive, and its leaders soon realized that with the high demand for real estate on board, one ring was not going to be enough. With this in mind, they decided to start another expansion project; this one would involve the construction of a new ring adjacent to the first one, and if they felt it to be necessary afterward, additional rings after that one. They decided to put the assembly chamber back into operation constructing modules of the same size, shape, and composition as it had before. These new rings, they decided, would extend outward from the original ring and surround the assembly chamber. The same process for attaching new modules would be used as before; they had perfected it already and it seemed to be the most efficient way of doing things. The difference this time was that the additional modules would be attached to the side of an existing part of the wheel.

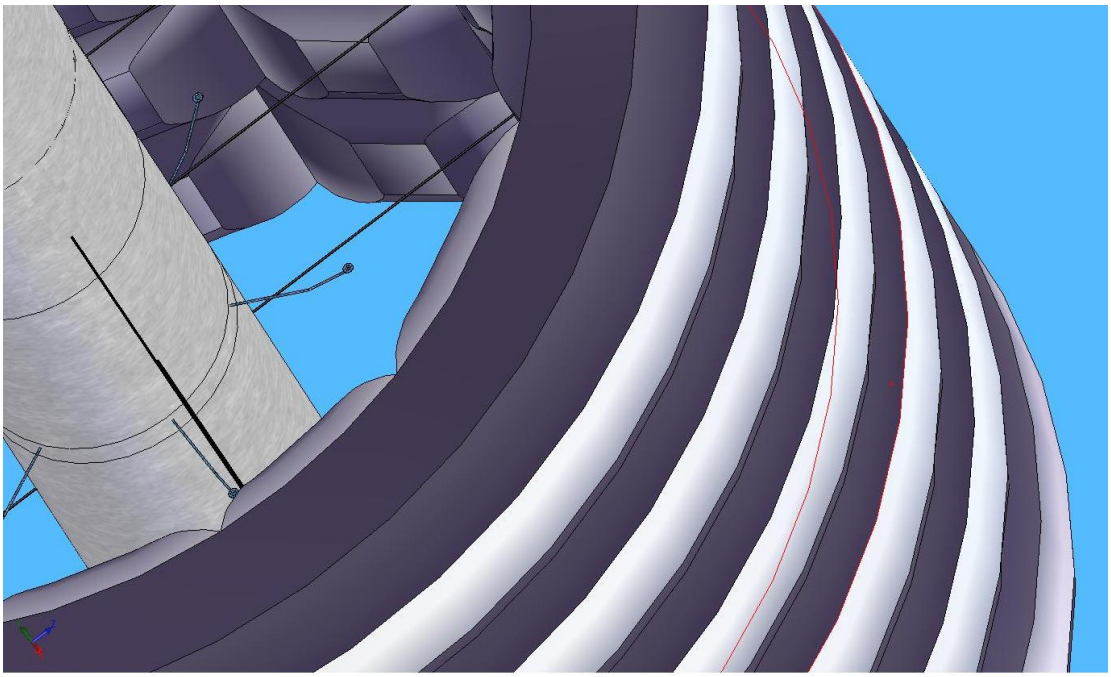

After all of the new modules were constructed and the connections between them were made, the resulting structure was a continuous expanse that spread the length of the series of rings, and all the way around. Because of the added length of the extra rings, the assembly chamber was extended both to increase capacity and to prevent construction on the new rings from interfering with the docking system.

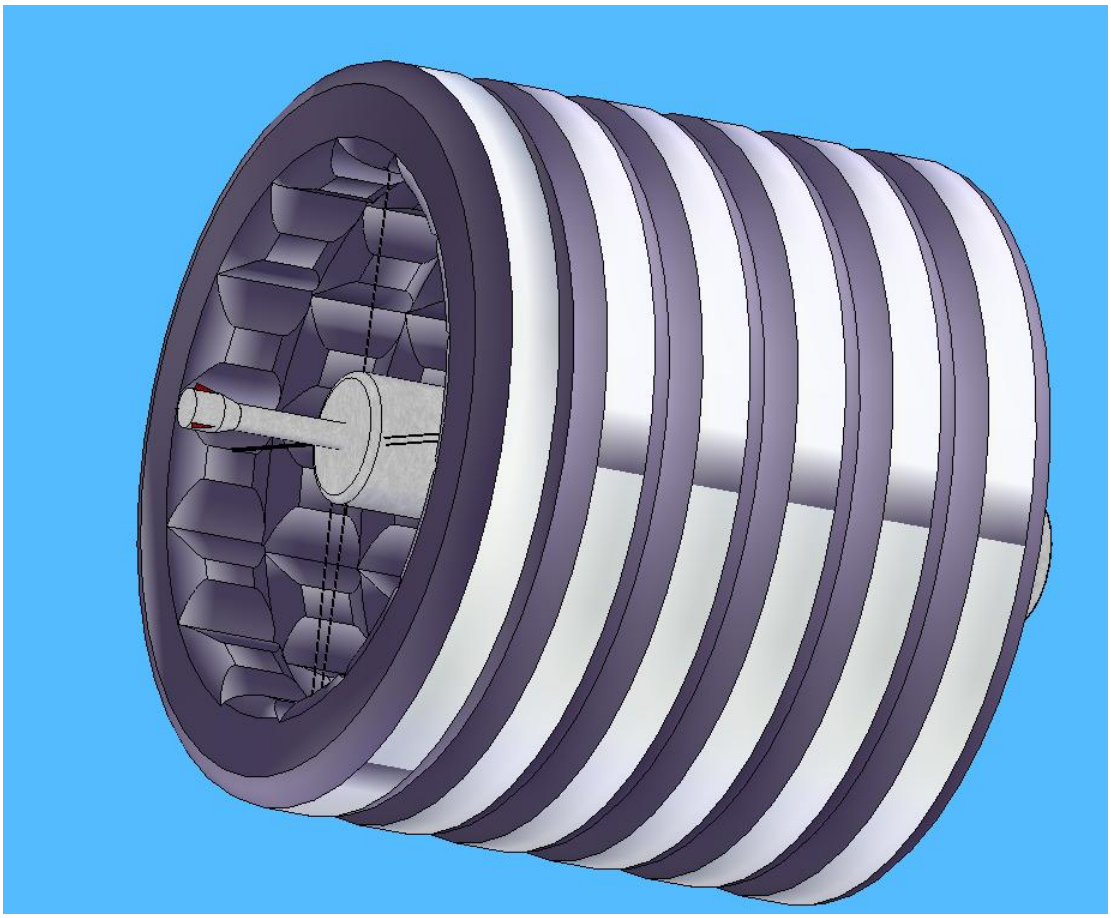

B. Modules

The modules in Phase III were, for all intents and purposes, exactly the same as the modules in Phase II in every way. The main difference was that in Phase III, there were much more of them; with **six complete rings of 14 modules each.** With each ring measuring 200 meters in width, **Maui was now well over a kilometer long.** The connections between the modules were the same except that some of the modules now had connections on all four sides. A consequence of this was that the connections could not cover the area where the corners of four modules met, and small gaps were left in these areas. These gaps manifested themselves as what appeared to be large, floor-to-ceiling columns when viewed from the inside of the colony. Apart from these "columns", the rest of the colony's living area appeared to be continuous. To maintain ease of access between these newly constructed rings and the center of the colony, elevator shafts were run from each ring to the assembly chamber, in the same configuration used in Phase II. For structural support, each additional module was secured to the assembly chamber with high strength steel cable.

C. Assembly Chamber

As the rings began moving outward, they began to envelop the assembly chamber until, eventually, there was no room left. The docking system prevented the rings from going any further, so the decision was made that the only

way to continue the expansion of the colony was to extend the assembly chamber. This was done by first constructing the extension inside the existing chamber. It was then moved outside the colony via the airlock. Then, everything was moved from the floor of the chamber to another part of the colony. The chamber was then evacuated and deflated. The airlock was then separated from the assembly chamber, and the extension was sewn on. When this was completed, the airlock was reattached, and the chamber was re-inflated with enough air to give it Earth-like air pressure. At that point, everything was replaced inside the assembly chamber as it was before and the docking system resumed normal operation. The assembly chamber now measured **1300 m in length**, not including the additional **200 m added** by the airlock. Maui was now almost **two kilometers long** from the fusion reactor all the way to the end of the airlock.

Phase 3 Dimensions

Object	**Dimension**	**Value**
Habitat Modules	Height	200 m
	Floor length	314 m
	Floor width	200 m
	Wall thickness	40 cm
	Volume	1.71×10^7 m^3
	Mass	2.42×10^4 metric tons
Elevator Shafts	Length	500 m
	Diameter	6 m
	Wall thickness	30 m
Assembly Chamber	Length	1300 m
	Diameter	500 m
Airlock	Length	200 m
	Diameter	500 m
Docking Arms	Length	125 m
	Diameter	6 m
Laboratory Module	Diameter	100 m
	Length	50 m
Helium-3 Storage Module	Diameter	100 m
	Length	100 m
Additional Storage Module	Diameter	100 m
	Length	100 m
Fusion Reactor	Diameter	150 m

	Length	200 m
	Radiator Dimensions	Three 40 m by 37 m right triangles
Colony As A Whole	Length of central axis	1750 m
	Diameter	1400 m
	Mass	2.59×10^{7} metric tons
	Moment of inertia	1.54×10^{13} kg·m^{2}
	Volume	1.73×10^{9} m^{3}

III. COMMUNITY DESIGN

The expansion of Maui had brought Maui from a small research base to a small boom town and finally to a fully developed nation with a diverse population, attractions, and rich culture and history now shared by the generations that have grown up on Maui. As the capital of the Saturn system, Maui was a large city with people from other Saturn systems, colonies from other planets, and of course, Earth.

A. Habitat Module Design

The inside of the modules in Phase II were almost entirely enclosed with a relatively small passage in between each module made the colony feel like a train car. In Phase III, the passage in between each module was significantly widened so the entire ring felt continuous. Once a new ring was complete, the barriers between each of the rings were also removed so that transportation between each ring was nothing more than a bus ride away. The development of the community was not perfectly organized. Like settlement of the American West, the settlement of a newly opened module was random, but a quick process. Immigrants began to spill into Maui and migrate to these "Wild West" areas.

Before a module was opened to settlement, zones were laid out in order to give businesses and companies a chance to have an area to utilize. "Red" zones were open to the public, where families could buy a plot of land and build a house. "Green" zones were specifically for agriculture and ranching. These were vast stretches of green grass and rich soil suitable for growing crops or raising animals. Restaurants, large supermarkets, and private farms mostly used these zones. "Blue" zones were the rest of the area, free to any business or anyone who could afford it. Sometimes the Mauan government w

The way the communities in Maui developed depended on the zoning, but a pattern was seen in three stages of development:

1. **First Stage: Rural**

   This was the "Wild West" point where a module or modules with a vast amount of land would first open, allowing the initial influx of citizens (mostly new immigrants), and companies to begin construction. Prior to opening, the builders of each module would choose what the terrain would look like. Each new module was unique in its landscaping features: some were hillier than others, some had pre-created lakes, and there was even a long river winding through four different modules called the "Slytherin" for its serpent-like shape. All of the colonies began with a bed of grass and many trees to keep the environment as natural-looking as possible, although as the module became more and more developed, some of these trees were cut down and used as timber for houses. This is when the government would step in and keep some of the land public and designate national parks to prevent complete destruction of the young ecosystem.

2. **Second Stage: Suburban**

After all of the land is bought up by people and businesses, construction workers are hired for quick development of houses and buildings. Sidewalks and roads are laid out to make transportation easier within the module. Most of the development begins where two modules connect since this is where the majority of traveling is done. These transportation areas are heaviest with population and grow the quickest, leaving the center areas in the modules less developed and more rural.

3. **Third Stage: Urban**

The urban areas quickly began in the space between the modules. Buildings grow the tallest to squeeze the greatest amount of people and industries in the developed area. As a person travels from the urban area toward the middle of the colony, he or she would find suburban areas surrounding the cities and slowly growing less and less densely populated toward the middle of the module, where most farms and parks would remain green and vibrant with wildlife. After many years the urban area would begin to spill into these rural areas in the middle as the population of Maui faced several waves of immigrants in its history, like the "BosNeWash" area of the United States in the late 19th and early 20th century.

1. Lighting

Using a technique called photo-enforced stratification, an artificial sky was created on the ceiling of every module. A liquid crystal-polymer mix was painted on the ceiling and hit with two doses of UV radiation, thus creating a giant LCD screen that displayed a classic Earth sky. A fractal geometric program generated clouds to make them look real, and a "weatherman" from Maui's City Council had the job of mixing up the weather, making it more cloudy and stormy or more clear and sunny every few days and coordinating with the temperature. At night, stars, constellations, planets, and moons sparkled on the ceiling, and the rare shooting star dazzled the Mauans. For special occasions, movies showed on some of the modules' ceilings at night for entertainment (*"Philips Finds Way to 'Paint' LCD Screens," 2002*).

B. Recreation

1.Nature

The people of Maui are big on the environment: every area that isn't industrialized and developed was covered with green grass, exotic colorful plants, and trees to support a rich

ecosystem. Many Mauans found it relaxing to walk along designated nature trails through each module that contain animals from small squirrels to foxes and even bears. These areas where larger animals, like the bears, were kept fenced off from the cities and residential areas for safety. Some campgrounds were established for a quiet getaway from the hustle and bustle of the crowded cities (camp fires are illegal, however). The **Slytherin River** provided rough waters perfect for white water rafting, and the large **Yabloko Lake,** which encompassed almost ¼ of an entire module, was used for small motor boat rides, fishing, swimming, and paddle boarding.

2.The Great Maui Zoo

A large zoo, which was locate in Marie Curie Park, housed a diverse number of animals, from zebras to alligators, which were also studied. The primary school likes to take field trips here to teach children about the Earth's ecosystem.

3.Disney Galaxy

Disney expanded its magical borders to Maui. A project that took almost a decade to complete, Disney Galaxy opened in 2149 and took the colony by storm. Tourists from all over the Saturn system were attracted to the grand opening of this theme park. Mickey and all of his friends, along with classic Disney princesses allowed children and adults alike all over the colony to share the happiness and magic of Disney that people on Earth enjoy. No space settlement is complete without Mickey.

4.City Life

Two major urban areas grew from the original modules of Phase 1. These areas were the first to become urbanized and modernized, so naturally the greatest attractions were held there. The cities resembled a New York-Las Vegas type of atmosphere with casinos, spas, diverse groups of people, many numerous shopping malls, and large productions of the theatre and the movies were shown. Many tourists came to these cities on Maui, and 5 star hotels became a necessity. These cities never seemed to sleep.

5.Historical Landmarks and Museums

Maui now had early 100 years of history, and the buildings that used to be the entire modules in Phase 1 were set aside as historical landmarks to represent how far Maui had come over. Tours were given on a daily basis for curious tourists to see how the first brave colonists on Maui lived. Museums began to open for each planet in the solar system. Artifacts, historical information, and pictures kept Mauans in touch with the rest of the solar system to see the culture of Earth, Mars and many colonies around the other planets.

6.T.V. and Movies

The entire Saturn system is now connected with the same TV networks. Maui is the headquarter for many of the major networks, included the news and entertainment. One show that grew popular quickly was **Mauan Idol**, where people from Maui and other colonies on Saturn could compete in a singing contest to ultimately win a record deal and money. Some talented singers would immigrate from Earth, where the competition was too high, in order to get a shot at fame through this reality TV show. Movies were easily received from Earth and large movie theaters would show the newest films that debuted from Earth. Maui was beginning its own movie industry, but it would take a while for talented actors and actresses to make a name for themselves in Maui's early production years.

7.Shopping Malls

Large shopping malls filled with stores sold everything from furniture to designer clothing (including the popular Biosuits) and everything in between. Like on Earth, shopping was a favorite activity among the colonists.

C. Medicine

To accommodate the needs of over 10000 people, the Maui medical system underwent expansion. Whereas in Phase II, there were only 2 hospital clinics, Phase III saw the construction of 5 more, **for a total of 7 hospital/clinics**. Healthcare was still free, but the City Council had taken measures to make the system a bit more competitive. Every citizen received **vouchers** that could be used at any hospital, with the hospitals receiving funding based on how many vouchers they received proportional to the number of people living in their local area. The idea was that the hospitals would compete with each other for patients, with competition driving quality service. A **Surgeon General** sat on the Mauan Cabinet to make sure that the system ran smoothly.

Another new addition to Mauan healthcare was the **pharmaceutical plant**. This was a small factory located in one of the more industrial zones that produced medicine. Drugs were produced using advanced **synthetic biology**. Engineers bred strains of genetically engineered bacteria whose cells acted like miniature chemical factories, turning nutrients and water into drugs. The factory also had a **small aeroponic garden** for growing medicinal herbs whose extracts could be used in medicines as well. The pharmaceutical plant was owned by the state of Maui, but like pretty much everything had its operations contracted out to a private firm. The Surgeon General and Director of Operations were responsible for making sure that the factory adequately met the needs of the Mauans.

D. Mental Health

Once again, the increased of the number of Maui's inhabitants caused the expansion of the psychological facilities. The number of psychiatrists to aid the people was **three psychiatrists per wheel**, or 18 psychiatrists in total.

The treatment of the psychologically-ill still occurred in psychological clinics. Treatment relied heavily on group counseling and support sessions. The team of 18 psychiatrists was able formed the **Maui Psychological Organization, or MPO**. The purpose of this society was to help integrate their patients back into society.

E. Government

Towards the beginning of the 22nd century, Maui's population grew so large that the City Council was now made up of 100 commissioners, each representing a district of about 100 people. The number of commissioners was so large, that it was difficult for the Council to reach consensus without weeks of debate amongst the various factions.

To fix this, a constitutional convention was held in 2117 with the intention of revising the City Council. The convention was a forum open to all Mauans, but the actual new constitution was written by the City Council. The Constitution was ratified through a popular referendum and went into effect in 2120.

The new constitution created a separate body within the City Council called **The Cabinet**. The Cabinet was comprised of the Mayor, the Director of Operations, and the various heads of Maui's bureaucratic agencies. The Mayor acted as both Head of the Cabinet and the leader of the City Council. He or she was still elected to the office by a popular vote. The other Cabinet members, including the Director of Operations, were normally elected City Council members who were then appointed to the Cabinet by the Mayor.

As a smaller body, the Cabinet could be much more focused. Most government policy originated within the Cabinet, with the City Council voting to approve the Cabinet's bills. If a bill failed to make it past the City Council, the Cabinet could amend it and try again.

Partisan politics played a large role under this new system because the City Council could enact a **vote of no confidence** can dissolve itself and therefore take a Mayor out of office if needed. It was therefore advantageous for the Mayor to be from the Council's majority party so that there would not be votes of no confidence against him or her. Elections had to occur every 5 years, but the City Council could dissolve earlier if it voted to. There were no term limits.

The judicial system remained pretty much unchanged with the exception that plaintiffs could now appeal to the **Saturnian Federation's Federal Court**.

F. Internal Transport

The colony had grown so large that the use of the internal transport system was much more frequent. The monorail system On the Run was extended to two track systems with cars running in opposite directions to keep the rotation stable. Another popular method of transportation was the Personal Rapid Transit (PRT) system. This system acted like a taxi service for the colonists where individual, small, light, "pod cars" carried between two to six people. The pod cars moved with an

electric motor and rubber wheels. Since there were no drivers, the system was programmed to stop for pedestrians, bikers, and other pod cars. Chances of a collision were greatly reduced because the reaction times of computers are much quicker than reaction times of humans. The maximum speed of the pod cars was **60 km/h**. Colonists who wanted a ride from a pod car could either go to a station or call for a ride from their cell phones, and they were charged by the kilometer (*"Personal Rapid Transit," n.d.).*

In the event of an emergency, a special button could be pushed on the PRT that put it into ambulance mode. All other PRT traffic would immediately be rerouted to make room for the ambulance PRT that would now be racing at top speed to the nearest hospital. During the ride, a telepresence system within the PRT allowed doctors at the hospital to assess the condition of the patient.

G. Networking

By this time, the Saturn System was connected through its own small Internet. Social media was beginning to catch on with Mauans reaching out to friends and relatives living on farther ends of Maui and on the multiple colonies orbiting Saturn. Online businesses were booming and a person could even make an entire living off of online businesses. Online shopping and private shipping companies offered speedy deliveries of clothing, toys, and sculptures, anything that is produced on Maui or close by.

H. Population

The same practices of Phase II, such as high set prices of baby food and diapers were implemented in Phase III, although the space for having more than two children in not quite as limited. Being a modern, fast-pasted society, Mauans found that having two or less children was more convenient anyway, so the social pressures were greater incentives than economic pressures to keep the total fertility rate at replacement level.

Despite this, immigration continued to be the greatest cause of population growth. Quotas were set in place to limit the number of people coming from Earth, Mars, and other major colonies. Patrols heavily guarded the airlocks connecting the entrances from the space dock to keep people from flying in, which was not too difficult to do in space.

I. Education

1. Lower Education

Maui's limited educational programs, e-learning and internship programs, were proving unfeasible in the demands of the growing children population of the ship. After analysis of educational systems on Earth run by Maui's representatives on Earth, Finland's educational system best fitted Maui's specifications. Maui developed one school per ring, and, for each school, there were fifteen teachers plus a school administration with one principal per school. In the typical classroom, there was an approximate ratio of 1 to 10 teacher: student ratio. Mimicking Finnish techniques and banking on the concept of limiting the waste of

essential resources, such as time and space, Maui incorporated one standardized test, the Essential Aptitude Test, EAT, for students which acted as a review of students' ability for Maui's employers. The future scholars had limited amount of homework to establish a foundation for volunteering and studying. The most important Finnish concept Maui applied is the exceptional teaching program; roughly 6-8% of Maui's top graduates got accepted to that program. This enabled primarily the elite to teach Maui's students and make them into future scholars. Educational research indicated the benefits of the use of technology, based on the principles of operant conditioning, to enhance teaching methods and a system of applying that method was being focus on for future scholars.

2. Higher Education

Maui's college, or better known as Noam Chomsky University, is located at the central ring of the ship. The cost of tuition for Noam Chomsky University was free of charge as long as students signed a contract stating that they would stay on board the ship to work for Maui's company. This program still enabled Maui's scholars to choose their careers for themselves, but they would just be in contract with Maui's partnering company. Moreover, Maui will capitalize on mentorship programs of already well-established professionals.

IV. LIFE SUPPORT

A. Power

To support tens of thousands of people along with the entire technological infrastructure needed keep them alive, Maui's power grid was expanded again to **908 MW**, about that of a medium sized city.. A new generation-2 IEC Polywell reactor was installed with **75% power conversion efficiency.** To create the necessary energy for Maui's operations, the nuclear reaction had to actually produce **1.21 gigawatts of power.** This required the consumption of 0.296 kg per day, or 108.029 kg per year. To reject 1.21 GW of waste heat, new radiators were installed. Like all previous radiators used on Maui, these used from water from Titan as a working fluid and operated at **1600 K**. These radiators consisted of three right triangles with legs of **40 meters and 30 meters**. The total two-sided area of the radiator array was **4440 square meters**.

B. Gravity

The radius of Maui did not change at all from phase 2 to phase 3, meaning that the angular velocity of the colony stayed constant the whole time. In phase 3, however, the colony became much more massive, meaning a significantly increased moment of inertia. To manage this, additional VASIMR engines were placed on the outside of each ring in order to maximize control of Maui's rotation.

C. Atmosphere

1. Pressure, Volume, and Composition

The air pressure aboard Maui was identical to that of Earth at sea level, 14.7 psi. Temperature at sea level is 1.204 kg/m3 and the total pressurized volume of air on Maui was 1.43×10^6 meters cubed. If the density of air at room temperature at sea level is 1.204 kg/m and the total pressurized volume of Maui during Phase II was 1.73×10^9 meters cubed , then the total mass of Maui's onboard atmosphere was approximately 2.08292×10^6 metric tons.

2. Air Processing

Once again, algae photosynthesis was the primary method for removing carbon dioxide from the air. It took 0. 6 liters of algae water per person per day to carry out the necessary oxygen regeneration, CO_2 absorption, water regeneration, nutrient removal and organic waste treatment. (*Shelef, Oswald, McGauhey, 1970)*

The algae worked by forming a closed ecological cycle. With a population of 10001 people, **6000.6 liters** of algae were needed. A reserve supply of extra algae was kept for other oxygen needs, making the total amount actually **6400 liters**. The algae grew within special under LED bulbs that mimicked sunlight. There was a set of these tanks in each module to ensure that the air was purified evenly.

A computer system constantly monitored the CO_2 levels in the air to regulate gas concentration. If the CO_2 level was too high, it activated tanks of dormant algae spores to make additional oxygen. If the level of oxygen threatened to become too

much, the system directed workers in the agricultural areas to trim leaves off of plants in order to prevent them from overproducing oxygen. Water vapor was extracted from the air and will be added to the drinking supply or be used in agriculture. Sensors will shut off the condenser if the air becomes too dry. Other potentially harmful contaminants such as dust, smoke, and metal fuels will be cryogenically filtered out of the air. The cryogenic filter uses helium produced as a byproduct from the Helium-3 miners to chill air until it reached liquid form.

3. Air Circulation

In the habitat wheel, air constantly moved in the direction of Maui's rotation. This circulation around the modules was created using a series of fans. This was important because fresh air needs to circulate around the cabin to ensure fresh air reached areas of the modules where plant life was not as dense in order to avoid becoming stale. The fans generated a stream of air that feel like natural wind with little noise. This was done by using bladeless fan technology. Bladeless fans draw in air using a small turbine and expel it through a tube. The tube is specially shaped so that air is drawn into it from behind as air leaves it from the front. This multiplies the airflow, creating a smooth and even breeze.

D. Water

Daily Water Use Phase III

USE	AMOUNT PER CAPITA	TOTAL	REASON
Drinking	4 liters	40,004 liters	This is more than enough for an adult to remain healthy and hydrated.
Showers	25 liters	250,025 liters	This study assumes showerheads that utilize 2.5 gallons a minute at 80psi, a ten-minute shower, and every inhabitant showering once a day.
Faucets	28.5 liters	285,028.5 liters	This study assumes that the average person washes their hands 10 times a day, for fifteen seconds with a faucet utilizing 11.4 liters per minute.
Clothes Washing	4 liters	40,004 liters	A regular front-

			loading washing machine uses 10 liter per day. This study assumes that on any given day, only 4,000 of the passengers are doing laundry.
Dish Washing	0 liters	0 liters	New types of dishwashers currently in development use high-energy UV and pressurized CO_2 to sanitize dishes, not unlike hospital sterilization equipment.
Toilets	20 liters	200,020 liters	The most efficient toilets on the market today are produced by the company TOTO and use a mere 1.28 gallons, or roughly 5 liters, per flush. This study assumes that the average person flushes 4 times a day.
Aeroponics	1 liter	10,001 liters	Aeroponics drastically cuts down water consumption by up to 98%, thus requiring only one liter per day to grow sufficient amounts of produce per person.
Aquaculture	N/A	2×10^6 liters	
Lake Yabloko	N/A	48,000,000 liters	This is not a daily amount, but simply an initial amount needed to fill the

			16,000 square Meter, 3-meter deep lake Yabloko

TOTAL DAILY WATER SUPPLY: 2,825,082.5 liters plus the initial 48,000,000 liters for the lake.

1. Water Supply

At this point in the development of Maui, the hole previously melted from the surface of Titan to the subterranean ocean has been expanded enough to lower the parts needed to assemble a processing plant beneath the ice. All water due to supply Maui will be processed and purified on board the vessel and then sent to the colony. In this manner, the massive amounts of incoming water will not have to go through the process of purification, and the SCWOs on board Maui will only be utilized to purify the wastewater of the colony's inhabitants. Further, from the processing plant can be launched a submarine designed with the purpose of scientific exploration. This vehicle will search for any life forms possibly inhabiting the vast oceans.

2. Water Treatment

On board Maui, there will no longer be SCWOs in each module, but one large, modified water purifier that has been developed using the technology of the SCWO and lies in the central truss of the colony. From there, the water will be pumped out to the various rings of the colony.

E. Food

Minimum Daily Food Consumables for Phase III

Food Group	**Amount Per Capita**	**Total Amount**
Fruit	0.36-0.37 kg	3600-3700 kg
Vegetables	0.36-0.71 kg	3600-7101 kg
Grain	0.14-0.23 kg	1400-2300 kg
Protein	0.11-0.17 kg	1100-1700 kg
Dairy	0.61-0.73 kg	6101-7301 kg
Oils	0.02-0.03 kg	200-300 kg
Spices	0.001-0.005 kg	10-50 kg
Total	1.6-2.25 kg	16011-22452 kg

1. Agriculture

As Maui expanded, its demand for food increased as well. With this increased demand in mind, while construction of new rings was occurring, the decision was made to **devote two entire modules solely to agriculture**. The layout of these modules was to be significantly different from all other modules; since there were to be no buildings and there was no need for vertical structures whatsoever, this module was to have multiple floors, one on top of the other, to maximize growing area. In total, there would be **15 floors**, one every ten vertical meters, for a total of about **0.8 km^2 per module of growing area**. Using the methods of aeroponics to grow crops, this was plenty of room to grow a quantity of any kind of crop desired, as well as large quantities of heavily demanded crops, such as wheat, corn, and rice.

2. Aquaculture

At this point, livestock were becoming more common on Maui, so only about **30%** of the average resident's protein intake consisted of seafood. Because of population growth, however, the total annual mass of seafood required had increased to about **150 metric tons**. This meant that the annual water consumption for aquaculture had increased to approximately **6000 m^3**, with about **2000 m^3** needed at any one time.

3. Livestock

Around this time, some small livestock animals were being introduced to Maui in order to feed the population and provide as Earth-like a diet as possible. Larger animals, such as cows, were not practical to bring onto the colony, as they required too much food and produced too much waste for the amount of food they produced. Smaller animals, such as goats, chickens, pigs, and turkeys were used instead because of their better compatibility with the functions of a space colony. A section of one of the agricultural modules was designated for these livestock in order to feed them and raise them to maturity.

F. Trash

Phase III's operations were almost identical to Phase 2, the only difference being the scale of the operation. Processing plants like the one in Phase 2 were located in each of Maui's rings.

G. Radiation

As Maui expanded, so did its electrostatic radiation shielding system. There were signs of success, as there had been no major health problems since the system had been installed. Still, in an abundance of caution, the leaders of Maui had a second layer of protection installed. This one consisted of a series of superconducting magnets laid out in such a way that they would add to the shielding effect of the electrostatic system. By mimicking a planetary magnetic field, these magnets were able to provide much improved protection against solar and cosmic radiation. (*Westover, 2013*)

V. PHASE 3: THE STORY SO FAR

A. Saturn Unification

As is the case with many of the great geopolitical powers, Maui never actively sought to dominate its neighbors, circumstance just forced it to.

Throughout the early 22nd century, the **Mauan Miracle** continued to draw outside investment to Maui. If there was any business to be done in the Saturn system, it was to be done at Maui. While Maui prospered, its old competitor, **Archangel**, languished as most Saturnian business flocked to Maui. By 2119, Archangel resembled the Maui of the 2060s, locked in a deep recession and facing insolvency. As Archangel's situation worsened, elements within the colony became angry. Blaming Maui for all of their economic problems, they decided to take action.

On April 30th, 2119 the radical elements within Archangel, led by **Adcott Baxter** took over Archangel and attacked a supply rocket flying under Maui's flag. The attack was made in the middle of Maui's night cycle with the actual weapon being a chunk of **space debris** flying at high speed. Adcott then hailed Maui and presented an ultimatum, cease supporting helium-3 operations or be destroyed.

Not wanting to give in, Maui launched a small flotilla of spacecraft to Archangel. This ragtag fleet was commanded by **Jebediah Mason**, the Mauan head of security.

Upon arriving at Archangel, the Mauan fleet used its **kinetic kill weapons** to easily decimate Archangel's defense drones. Spacecraft are so fragile and easily devastated by kinetic weapons that Jebediah Mason only had to threaten Adcott with the immediate destruction of Archangel to end the battle.

The brief fiasco brought a recession to the Saturnian system as investors feared future armed conflicts. To prevent such a conflict from ever happening again, the leaders of Maui forced Archangel to sign a declaration where both settlements agreed to give up some of their sovereignty to a Saturn wide federal government. This government would oversee the future settlement of the Saturn system and would be equipped with a **military** to keep the peace. Most importantly, Maui was to be declared the new capitol of this federation, becoming the center of power for a united Saturn system. Thus the **Saturnian Federation** was born.

B. The Saturnian Federation

The Saturnian Federation was a political entity created in the wake of the War of Saturn Unification that held sovereignty over the Saturnian system. As a federal system, the federation saw power being split between the local governments of Saturn's individual settlements and a system wide federal government.

1. Branches of Government

a. The Legislature

The Legislative branch was bicameral with a **House of Representatives and a Senate**. The House of Representatives had representatives from each district in the Saturnian Federation. Each moon in the Saturn system along with any settlements orbiting around the moon was its own district. For settlements

that freely orbited Saturn, districts were **1000 km wide bands of space**. The number of representatives was based on population size. The Senate had one representative from every district in the Saturn Federation, regardless of size. Both the House of Representatives and the Senate were policy-making bodies whose laws applied to every colony within the Saturnian Federation. The Federation's **Constitution** spelled out what areas the federal legislature could pass legislation over and what powers were left to local governments. The House and the Senate could also impeach the President with a 2/3's vote from each body.

Elections within the legislature were staggered so that only 1/3 of the legislature was up for reelection every two years. Representatives served for two year terms while senators served for six year terms. There were no limits to the amount of terms one could run for office.

b. The Executive

The executive branch of the Saturnian Federation was headed by a President with a Vice President and a cabinet. The President picked the cabinet who served as heads of several federal departments, such as the Department of Defense, the Department of Economics, the Department Resource Management, and so on. The President was responsible for approving legislation, declaring war, appointing the cabinet, appointed Supreme Court justices, and meeting with the Mayors of each colony in biannual conferences. **The president is also the Federation's head of state, acting as chief diplomat with other nations.** The Vice President's purpose was solely to be there in case of incapacity, impeachment, or death of the President. The President was elected by a **winner-take-all system**, where the candidate with the most votes from every colony wins.

c. The Judiciary

The judicial branch of the federal government consisted of the **Supreme Court**, which acted as **the highest appellate court** in the Saturnian Federation. The Supreme Court was made up of 11 judges who were appointed by the President and served life terms. Most of the cases that made it up to the Supreme Court docket dealt with disputes between the settlements and corporations. The Court made sure to quickly establish **judicial review**, meaning that rulings dealing with the interpretation of laws applied to every settlement.

2. Exerting Authority

The Saturn Federation's greatest challenge is managing the helium-3 trade. Much of this management revolves around making sure that prices are set in the Saturnians' favor, as much of the Federation's GNP comes from helium-3 mining. It is in the Federation's best interests to keep the price of helium-3 high through an artificial scarcity so that buyers pay a high price for it. In addition by the mid 22nd century, helium-3 was now the dominant source of energy in the solar system and every government wanted to make sure that the supply flowed smoothly under a stable market. If too much helium-3 was produced, the price would plummet, causing the market to burst. If too little was produced, prices would sky rocket

causing a recession. To prevent this, the Federation was granted authority by the UN to issue licenses to miners who only agreed to follow the Federal regulations.

The Federation's primary instrument for enforcing regulations was its **military, somewhat jokingly referred to as Starfleet by the Saturnians**. The SDC's disputes with the Free Miners during the 2060s had shown that it is very difficult to enforce policy through legislation alone when one's territory consists of empty space. If a group wanted to start mining helium-3 without a license, there would be really nothing stopping them. Someone would actually have to go out and physically enforce policy in order to get anything done.

Starfleet operated under the **Mason Doctrine**. Just as Jebediah Mason was able to end the war of Saturn Unification by merely threatening to destroy Archangel, Starfleet only wished to have the *capability* of shutting down an unlicensed mining operation through force. To make its presence felt, Starfleet operated hundreds of ships on the Saturnian system and made frequent inspection tours to mining operations. By doing this, Starfleet was able to keep the peace for many years and still does to this very day. Since it sees almost no actual combat, Starfleet often works on humanitarian missions during peacetime.

Phase 4

(2154- ∞)

EPILOGUE

There is one more exploit that Maui is known for. According to legend, he sought to win immortality for mankind. To do this he would have to journey far, to the realm of Hine-nui-te-po, the ruler of the underworld, and wrestle the right to immortality from her.

Maui and his brothers set off to the west until they reached the gates of the underworld. There Maui told his brothers to wait with the canoe. Maui didn't know if he was coming back, and wanted his brothers to live.

Walking into the heart of darkness alone, Maui drew his war club and engaged in epic battle with Hine. Maui lead the battle, but all of the sudden heard the voices of his brothers near by. Distracted, he lost his guard and was mortally wounded by Hine. Maui became the first human to die, and from then on, all humans would be cursed to grow old, wither and die; Maui failed.

By the middle of the 22nd century, the Solar System had ceased to be the final frontier. Beamriders and IPVs made the worlds smaller, golden arches appeared on the moon, and a Disneyland orbited Saturn. Many feared that a sense of malaise was growing throughout humanity, that there was nothing to strive for anymore, to challenge. Nowhere was this sense stronger than in the Saturnian Federation, the last region of space to be completely settled. The Saturnians still had some frontier restlessness within them, and wanted to do one more great thing before settling down, to commemorate the end of an era.

Looking to their capitol, Maui, for inspiration, the Saturnians saw a man very much like themselves who fought to preserve his people's way of life, but ultimately failed.

However, legend tells of another great Polynesian leader, who millennia after Maui, tried to once again save his people from the jaws of death. Unlike Maui, this leader understood that while Polynesians may die as individuals, as long as the Polynesian *people* survives, they would be immortal. On this belief, the great hero

had his people leave their dying homeland and set out across the great ocean on small rafts seeking new islands to call home.

The Polynesians survived and thrive to this day. Although they may live on many islands and come from different tribes, they never forgot the name of the man who had the vision and courage to set out into the unknown and find new homelands.

It was this leader's name that the Saturnians gave to their new project, a bold attempt to set out into the unknown and find new homes amongst the stars, it was to be called…

(Yep Maui's a prequel)

WORKS CITED

1. "Airships to Orbit." *Rimstar.org*. N.p., 2010. Web. 19 Feb. 2013. <http://rimstar.org/space/jp_aerospace_balloon_airship_to_orbit.htm>.

2. Badhwar, G. D., H. Huff, R. Wilkins, and Shelia Thibeault. *Material Build-up of the TransHab Inflatable Structure.* Digital image. Elsevier, n.d. Web. 23 Feb. 2013. <http://144.206.159.178/ft/904/73853/1266747.pdf>.

3. Bono, Philip. Recoverable Single Stage Spacecraft Booster. James E Webb, assignee. Patent US3295790. 16 June 1964. Print.

4. Buczynski, Beth. "A Waterless Dishwasher You'll Never Have To Empty." *EarthTechling*. N.p., n.d. Web. 02 Mar. 2013. <http://www.earthtechling.com/2012/09/a-waterless-dishwasher-youll-never-have-to-empty/>.

5. Busard, Robert W., and Lorin W. Jameson. "Design Considerations for Clean QED Fusion Propulsion Systems." Proc. of 11th Symposium on Space Nuclear Power and Propulsion, Albuquerque. N.p.: n.p., n.d. N. pag. *Askmar*. Web. 22 Feb. 2013. <http://www.askmar.com/Fusion_files/Design%20Considerations%20for%20QED%20Fusion.pdf>.

6. Bussard, Robert W. "An Advanced Fusion Energy System for Outer Planet Space Propulsion." *Space Technology and Applications International Forum*. Proc. of Space Technology and Applications International Forum. Vol. 608. N.p.: n.p., 2002. N. pag. *Askmar*. Web. 22 Feb. 2013. <http://www.askmar.com/Fusion_files/Advanced%20Fusion%20Energy%20System.pdf>.

7. Bussard, Robert W., and H. D. Froning, Jr. "Aneutronic Fusion Propulsion for Earth Orbit and Beyond." *Space Technology and Applications International Forum*. Proc. of Space Technology and Applications International Forum. 1289-294. *Askmar*. Web. 22 Feb. 2013. <http://www.askmar.com/Fusion_files/Aneutronic%20Fusion%20Propulsion.pdf>.

8. Bussard, Robert W., and Lorin W. Jameson. "From SSTO to Saturn's Moons: Superperformance Fusion Propulsion for Practical Spaceflight." Proc. of 30th AIAA/ASME/SAE/ASEE Joint Propulsion Conference. N.p.: n.p., n.d. N. pag. *Askamar*. Web. 22 Feb. 2013. <http://www.askmar.com/Fusion_files/From%20SSTO%20to%20Saturns%20Moons.pdf>.

9. Bussard, Robert W. "System Technical and Economic Features of QED-Engine Driven Space Transportation." Proc. of 33rd AIAA/ASME/SAE/ASEE Joint Propulsion Conference. N.p.: n.p., n.d. N. pag. *Askmar*. Web. 22 Feb. 2013.

<http://www.askmar.com/Fusion_files/QED%20Space%20Transportation.pdf>.

10. "ChooseMyPlate.gov." *ChooseMyPlate.gov*. USDA, n.d. Web. 02 Mar. 2013.

11. Chung, Winchell. "Atomic Rocketships of the Space Patrol." *Atomic Rockets*. Project RHO, n.d. Web. 05 Feb. 2013. <http://www.projectrho.com/public_html/rocket/index.php>.

12. "EMC2 Has Proven:." *Emc2 Fusion Development Corporation*. N.p., n.d. Web. 17 Feb. 2013. <http://www.emc2fusion.org/>.

13. *Figure 12.3*. Digital image. *Chapter 12, Section 2*. N.p., n.d. Web. 17 Feb. 2013. <http://lifeng.lamost.org/courses/astrotoday/CHAISSON/AT312/HTML/AT31202.HTM>.

14. Gerstenmaier, William, Alexey Krasnov, Thomas Reiter, Yoshikazu Kato, and Giles Leclerc. *International Docking System Standard (IDSS) Interface Definition Document (IDD) Revision A*. Rep. International Docking Standard, 13 May 2011. Web. 23 Feb. 2013. <http://www.internationaldockingstandard.com/download/IDSS_IDD_RevA_Final_051311.pdf>.

15. Grey, George, Sr. "The Legend of Maui." *Polynesian Mythology & Ancient Traditional History of The New Zealanders As Furnished by Their Priests and Chiefs*. N.p.: n.p., 1854. 11-41. *Internet Sacred Texts Archive*. Web. 31 Jan. 2013.

16. "Heavy Water." *Wikipedia*. Wikimedia Foundation, 03 June 2013. Web. 09 Mar. 2013. <http://en.wikipedia.org/wiki/Heavy_water>.

17. "Homework Overload Gets an 'F' from Experts." *TODAY.com*. N.p., n.d. Web. 09 Mar. 2013.

18. Jones, Scott. "7(a) Atmospheric Composition." By Michael Pidwirny. N.p.: n.p., n.d. N. pag. *Fundamentals of Physical Geography*. University of British Columbia Okanagan, 2006. Web. 2 Mar. 2013. <http://www.physicalgeography.net/fundamentals/7a.html>.

19. JP Aerospace. *ATO: Airship To Orbit*. Rancho Cordova: JP Aerospace, 2013. JP Aerospace, 1 Nov. 2012. Web. 19 Feb. 2013. <http://www.jpaerospace.com/>.

20. Kennedy, Kriss J., Jasen Raboin, Gary Spexarth, and Gerard Valle. *Inflatable Structures Technology Handbook: Ch. 21 Inflatable Habitats*. Tech. NASA Johnson Space Center, 5 July 2000. Web. 23 Feb. 2013. <http://ntrs.nasa.gov/archive/nasa/casi.ntrs.nasa.gov/20110000798_2010047135.pdf>.

21. Landis, Geoffrey A. "Interstellar Flight by Particle Beam." Proc. of STAIF Conference on Innovative Transportation Systems for Exploration of the Solar System and Beyond, Albuquerque. 2001. NASA. Web. 13 Mar. 2013. <http://ntrs.nasa.gov/archive/nasa/casi.ntrs.nasa.gov/20020023956_2002030230.pdf>.

22. Levitan, Dave. "Nuclear Fuel From the Sea." - *IEEE Spectrum*. N.p., n.d. Web. 17 Feb. 2013. <http://spectrum.ieee.org/energy/nuclear/nuclear-fuel-from-the-sea>.

23. Lindroos, Marcus. "DOUGLAS." *Introduction to Future Launch Vehicle Plans*. N.p., 15 June 2001. Web. 05 Feb. 2013. <http://www.pmview.com/spaceodysseytwo/spacelvs/sld008.htm>.

24. "MagBeam Propulsion: To Mars And Back In 90 Days." *Space.com*. N.p., n.d. Web. 13 Mar. 2013. <http://www.space.com/453-magbeam-propulsion-mars-90-days.html>.

25. Miller, Ron. *The Dream Machines: An Illustrated History of the Spaceship in Art, Science, and Literature*. Malabar, FL: Krieger Pub., 1993. Print.

26. Millis, Mark. "Energy, Incessant Obsolescence, and the First Interstellar Missions." Proc. of 61st International Astronautical Congress, Prague. 2010. MIT, 7 Jan. 2011. Web. 13 Mar. 2013. <http://www.technologyreview.com/view/422320/interstellar-travel-not-possible-before-2200ad-suggests-study/>.

27. *Mining Helium-3 On the Moon*. Dir. Christopher Barnett. Perf. Christopher Barnett. *Explaining the Future*. Youtube, 12 July 2008. Web. 17 Feb. 2013. <http://www.youtube.com/watch?v=94rEqHP9dOQ>.

28. *Passive and Acting NDS*. Digital image. *Wikipedia.com*. Wikimedia Foundation, 2011. Web. 23 Feb. 2013. <http://en.wikipedia.org/wiki/File:Passive_and_active_NDS..png>.

29. "Personal Rapid Transit." *Personal Rapid Transit*. N.p., n.d. Web. 09 Mar. 2013.

30. "Plastic Spaceships - NASA Science." *Plastic Spaceships - NASA Science*. NASA Johnson Space Center, n.d. Web. 05 Mar. 2013.

31. "The Polywell Nuclear Reactor." *The Polywell Nuclear Reactor*. N.p., n.d. Web. 17 Feb. 2013. <http://www.polywellnuclearfusion.com/PolywellReactor/PolywellReactor.html>.

32. "SATURN: MAGNETIC FIELD AND MAGNETOSPHERE." *Saturn: Magnetic Field and Magnetosphere*. N.p., n.d. Web. 05 Mar. 2013.

33. Savage, Marshall T. *The Millennial Project: Colonizing the Galaxy in Eight Easy Steps*. Boston: Little, Brown, 1994. Print.

34. Schroeder, Gerald L., and Steven Serfling. "High-yield Aquaculture Using Low-cost Feed and Waste Recycling Methods." *American Journal of Alternative Agriculture* 4.2 (1989): n. pag. *Cambridge Journals Online*. Cambridge University Press, 30 Oct. 2009. Web. 2 Mar. 2013.

35. Shannon, John B. "World Energy Graphic." *John Brian Shannon*. N.p., n.d. Web. 17 Feb. 2013. <http://johnbrianshannon.com/world-energy-graphic/>.

36. Shaw, Linda. *The Seattle Times*. Finland's Educational Success Story: Less Testing, More Trusting, 14 Nov. 2012. Web. 09 Mar. 2013. <http://seattletimes.com/html/localnews/2019676789_finland14m.html>.

37. Shelef, Gedalia, William J. Oswald, and P. H. McGauhey. "Algal Reactor for Life Support Systems." *Journal of the Sanitary Engineering Divsion* 96.1 (1970): 91-110. American Society of Civil Engineers. Web. 9 Mar. 2013. <http://cedb.asce.org/cgi/WWWdisplay.cgi?7000907>.

38. Siemens. Energy Sector/Fossil Fuel Power Generation Division. *Trail-blazing Power Plant Technology*. *Siemens*. Siemens, 19 May 2011. Web. 2 Mar. 2013. <http://www.siemens.com/press/en/pressrelease/?press=/en/pressrelease/2011/fossil_power_generation/efp201105064.htm>.

39. "Space Radiation - Frequently Asked Questions." *Space Radiation Analysis Group*. NASA Johnson Space Center, n.d. Web. 05 Mar. 2013.

40. Taylor, Adam. "26 Amazing Facts About Finland's Unorthodox Education System." *Business Insider International*. Business Insider Inc, 14 Dec. 2011. Web. 9 Mar. 2013. <http://www.businessinsider.com/finland-education-school-2011-12?op=1>.

41. "Tilapia Culture." *Tilapia Culture*. N.p., n.d. Web. 02 Mar. 2013.

42. "Titan, Saturn's Largest Moon, Facts and Discovery." *Space.com*. N.p., n.d. Web. 07 Feb. 2013. <http://www.space.com/15257-titan-saturn-largest-moon-facts-discovery-sdcmp.html>.

43. Tripathi, Ram. "Electrostatic Active Space Radiation Shielding for Deep Space Missions." NASA Langley, n.d. Web. 12 Mar. 2013. <Electrostatic Active Space Radiation Shielding for Deep Space Missions>.

44. "USATODAY.com - Philips Finds Way to 'paint' LCD Screens." *USATODAY.com - Philips Finds Way to 'paint' LCD Screens*. USATODAY, 01 May 2002. Web. 11 Mar. 2013.

<http://usatoday30.usatoday.com/tech/news/2002/05/01/lcds.htm>.

45. ""Virtually Waterless" Washing Machine Cleans Clothes with Polymer Beads." *GreenBiz.com*. N.p., 29 June 2009. Web. 02 Mar. 2013. <http://www.greenbiz.com/news/2009/06/29/virtually-waterless-washing-machine-cleans-clothes-polymer-beads>.

46. Wang, Brian. "Floating Airship Could Radically Reduce the Cost of Space Accesss." Weblog post. *Floating Airship Could Radically Reduce the Cost of Space Accesss*. Next Big Future, 6 Oct. 2011. Web. 19 Feb. 2013. <http://nextbigfuture.com/2011/10/floating-airship-could-radically-reduce.html>.

47. Westover, Shayne. "Radiation Protection and Architecture Utilizing High Temperature Superconducting Magnets." *Www.NASa.gov*. NASA Johnson Space Center, n.d. Web. 12 Mar. 2013. <http://www.nasa.gov/directorates/spacetech/niac/westover_radiation_protection.html>.

48. Winglee, Robert, and B. R. Roberson. "MagBeam." University of Washington, Nov. 2011. Web. 13 Mar. 2013. <http://www.ess.washington.edu/Space/magbeam/>.

49. Zubrin, Robert, and Richard Wagner. *The Case for Mars: The Plan to Settle the Red Planet and Why We Must*. 2011 ed. New York: Free, 1996. Print.

50. Zubrin, Robert. *How to Live on Mars: A Trusty Guidebook to Surviving and Thriving on the Red Planet*. New York: Three Rivers, 2008. Print.